UVOD
INTRODUCTION

RODA S.A. zadržava pravo sadržaja ovog kataloga koji se ne sme reprodukovati na bilo koji način bez našeg pismenog odobrenja. Modeli i / ili tehnički podaci mogu da se promene bez prethodnog obaveštenja.

RODA S.A. reserves the rights of the contents of this catalogue that should not be reproduced in any way without our written approval. Models and/or technical data might change without any previous notice.

Izdanje ovog novog kataloga ima za cilj najbolje moguće informacije koje korisnik točkova može dobiti, kako bi odabrao najprikladniji tip točkova ili ležaja za određenu primenu.

Postoje neki faktori koje treba uzeti u obzir, kao što su:

- težina,
- stanje podloge,
- uslovi okoline (voda, vlaga, hemikalije, temperatura, higijenski zahtevi)

Točak ne bi trebalo da stvara probleme okolini dok je u upotrebi.
Problemi koje treba izbegavati su:
- buka
- vibracije
- oštećenje poda

Pored toga, točak treba lako da se kotrlja i ima predviđeni radni vek za specifične uslove njegovog rada.

U ovom katalogu predstavljamo proizvode najpouzdanijih evropskih konstruktora koji - po našem mišljenju - pokrivaju najveći deo različitih slučajeva. Ako zahtjevi za određene aplikacije ne pronađu rješenje kroz sadržaj ovog kataloga, slobodno nas kontaktirajte i sa velikim zadovoljstvom ćemo zajedno naći najbolje rješenje za vaš problem. Iskreno vam se zahvaljujemo na pažnji koju posvećujete našim naporima.

The publication of this catalogue aims to the best possible information that a user of wheels can get, in order to choose the most appropriate type of wheel or castor for a specific application.

There are some factors that should be taken into consideration such as:

- weight
- ground / floor condition
- environment conditions (water, moisture, chemicals, temperature, hygienic requirements)

A wheel shouldn't cause any issues to the environment that is used in.
The problems that should be avoided are:

- noise
- vibrations
- floor damage

Additionally, a wheel should **roll with ease and have a prerequisite service life** for the specific conditions of its usage.

In this catalogue are been presented our products together with the ones of the most reliable European wheels / castors manufacturers which cover the vast majority of various applications.

RODA S.A. can still of course create / find the suitable customized solution to any specific requirement possibly not covered by the range of the present catalogue.

PROFIL KOMPANIJE
COMPANY PROFILE

RODA SA je počela 1948. godine kao porodična firma čiji je glavni cilj bio proizvodnja konstrukcija na točkovima i prodaja točkova koji su se uglavnom koristili u poljoprivrednim primjenama.

Godine 1963. kompanija je počela da se bavi točkovima za industrijske primene, istovremeno proširujući saradnju sa najvažnijim evropskim konstruktorima i raznolikošću svojih proizvoda.

Kao rezultat toga, naša kompanija se pokazala kao najvažnija u Grčkoj za ovu vrstu proizvoda. 1981. godine osniva se filijala u Atini kako bi se pokrili zahtjevi u južnoj Grčkoj.

Poznata pod imenom RODA S.A. Godine 2002. kompanija otvara sopstveni proizvodni pogon u Industrijskom području Soluna koristeći savremenu opremu i tehnike osiguranja kvaliteta.

- Kompletna organizacija,
- izbor i razrada sa najboljim saradnicima,
- kontrola kvaliteta proizvoda i usluga koje nudimo,
- kontinuirano informisanje o novim tehnologijama I aplikacijama

čine naš vodič, obećavaju razvoj prisutnosti u sektoru točkova i točkova za industrijske namene, institucionalne namene, bolničke namene i primene za nameštaj

RODA S.A. started in 1948 as a family company whose main object was the production of wheel-driven constructions and the sales of wheels which were mainly used in agricultural applications.

In 1963 the company started to deal with wheels for industrial applications expanding at the same time the cooperations with the most important European producers and the variety of its products.

As a result, our company turned out to be the most important in Greece for the specific market.

In 1981 the branch-office in Athens is being established in order to cover the demands in south Greece.

Since 1988 it operates as a societe anonyme, branded as RODA S.A.

In 2002 the company starts its own produciton plant in the Industrial Area of Thessaloniki by using state of the art productions and quality assuring techniques.

- the complete organisation,
- the choice and the elaboration with the finest collaborators,
- the quality control to the products and to the services we offer,
- the continuous information on the new technologies and applications

consist our guide, and promises the developping presence in the sector of wheels and castors for industrial, institutional, hospital and furniture applications.

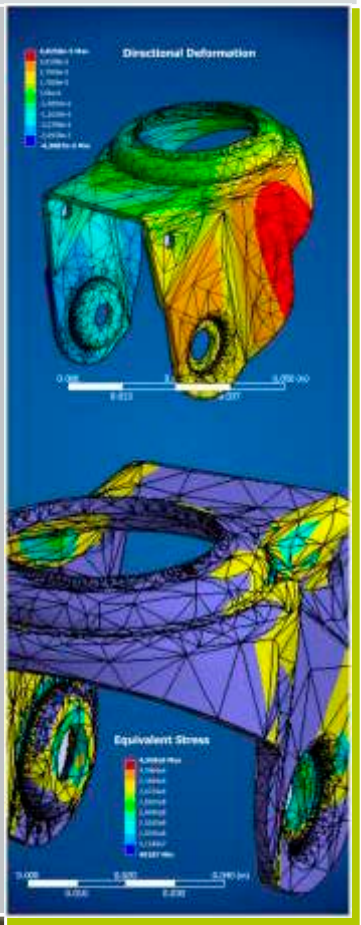

O KOČNICAMA I KATERIMA
ABOUT CASTORS & WHEELS

Točkovi su podeljeni u četiri kategorije prema njihovoj upotrebi:

- Industrijske primene
- Bolničke primene
- Institucionalne aplikacije
- I Namestaj

Postoji generalno prihvatljiva međunarodna standardizacija od pouzdanih evropskih konstruktora koja je navedena u nastavku:

EN 12526 o terminologiji i simbolima koji se odnose na točkove
EN 12527 gde je naveden ispitni uređaj i metode ispitivanja
EN 12528 u vezi sa točkićima za nameštaj
EN 12529 u vezi točkića za obrtne stolice
EN 12530 u vezi točkova za institucionalne primene
EN 12531 u vezi točkova za bolničke krevete
EN 12532 Točkovi za ručno pogonjene ili vučene aplikacije pri brzini manjoj od 4 km / h
EN 12533 u vezi točkova za ručno pogonjene ili vučene aplikacije pri brzini između 4 km / h i 16 km / h.

Osim gore navedenih međunarodnih standarda, neke evropske zemlje imaju svoju kodifikaciju npr. DIN (Nemačka), UN (Italija), BSI (Engleska) gde opisuju standarde svojih lokalnih proizvoda i materijala od kojih su napravljeni.

Glavni delovi tocka su:

1. Guma Spoljna površina točka koja se dodiruje sa podlogom. Najčešći materijali za njegovu proizvodnju su:

- Puna guma
- Meka elastična guma koja apsorbuje vibracije
- Termoplastični materijali kao što su najlon, polipropilen
- Termoset fenolni materijali
- poliuretani

2. Obod koji drži gumu do osovine. Najčešći materijali za njegovu proizvodnju su:

- presovani čelik
- termoplastični materijali kao što su najlon I polipropilen
- liveni aluminijum
- liveno gvožde
- čelik proizveden

3. Nosač koji se može fiksirati, jednostavno podupire točak na konstrukciju ili se okreće, dajući i sposobnost upravljanja u željenom smjeru. Najčešći materijali za njegovu izgradnju su:

- Presovani čelik pocinkovan
- nerđajući čelik
- kovani čelik
- čelik proizveden

Najvažniji faktor u pogledu nosivosti, ekološke prihvatljivosti i životnog veka nosača, je konstrukcija i materijali njegove okretne glave, kao što je opisano u odeljku PODRŠKA OPIS (strana N 11)

4. Osovina koja može biti:

- klizni ležaj
- valjkasti ležaj
- inoks valjkasti ležaj
- jednoredni kuglični ležaj
- dvoredni kuglični ležaj
- dvoredni inoks kuglični ležaj

The tire
vanjsku površinu kotrljanja koja se dodiruje sa podlogom

The tyre
The external rolling surface which contacts to the ground

The rim
povezivanje gume sa osovinom

The rim
Connecting the tyre to the axle

The wheels are divided in four categories according to their use:

- Industrial applications
- Hospital applications
- Institutional applications
- Furniture

There is a generally acceptable international standardization from the reliable European producers which is mentioned below:

EN 12526 regarding the terminology and the symbols related to castors and wheels
EN 12527 where specified the test devices and testing methods
EN 12528 regarding furniture castors
EN 12529 regarding castors for office chairs
EN 12530 regarding castors for institutional applications
EN 12531 regarding castors for hospital beds
EN 12532 regarding castors for manually propelled or towed applications at a speed less that 4 km/h
EN 12533 regarding castors for manually propelled or towed applications at a speed in between 4 km/h and 16 Km/h

Except the international standards above, some European countries have their own codification e.g DIN(Germany), UNI(Italy), BSI(England) where they describe the standarts of their local products and the materials they are made of.

The main parts of a castor are:

1. The tyre the outside rolling surface of the wheel that contacts to the ground. Most common materials for its manufacturing are:

- solid rubber
- soft elastic shock absorbing rubber
- thermoplastic materials such as nylon, polypropylene
- thermoset phenolic materials
- polyurethanes

2. The rim which holds the tyre to the axle. The most common materials for its manufacturing are:

- pressed steel
- thermoplastic materials such as nylon and polypropylene
- cast aluminum
- cast-iron
- steel fabricated

3. The support which can be **fixed**, simply supporting the wheel to the construction or **swivel**, giving also a steering ability to the required direction. The most common materials for its construction are:

- Pressed steel zinc plated
- stainless steel
- Forged Steel
- Steel fabricated

Most important factor regarding the load capacity, the environmental suitability and the service life of a support, is the design and the materials of its swivel head, as described in the section SUPPORTS DESCRIPTION (page 11)

4. The axle which can be:

- plain bearing
- roller bearing
- inox roller bearing
- single ball bearing
- double ball bearing
- double inox ball bearing

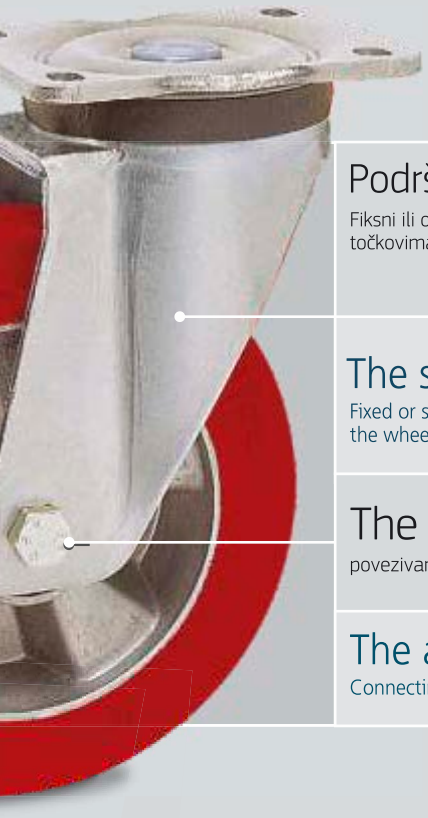

Podrška

Fiksni ili obrtni podupirajući konstrukcije na točkovima i nudeći sposobnost upravljanja

The support

Fixed or swivel supporting the construction on the wheels and offering also the steering ability

The aksle

povezivanje točka na nosač

The axle

Connecting the wheel to the support

MATERIJALI
MATERIALS

Tehničke karakteristike materijala koji se najčešće koriste u proizvodnji točkova

Korišteni materijali Material used	Svojstvo	Property	Value Value
Presovani čelik hladno valjani Pressed steel cold rolled	Tvrdoća	Hardness	50-62 HRB
	Izduženje	Elongation	27-36%
	Sila pucanja	Tensile strength	340-390 N/mm^2
Presovani čelik toplo valjani Pressed steel hot rolled	Tvrdoća	Hardness	106 HB
	Izduženje	Elongation	20%
	Sila pucanja	Ultim. tens. strength	340-390 N/mm^2
Presovani nerđajući čelik AISI 304 Pressed stainless steel AISI 304	Tvrdoća	Hardness	70-88 HRB
	Izduženje	Elongation	60-65%
	Sila pucanja	Ultim. tens. strength	500-700 N/mm^2
Liveni aluminijum Die-cast aluminum	Tvrdoća	Hardness	50-62 HRB
	Izduženje	Elongation	1-2%
	Sila pucanja	Ultim. tens. strength	260-290 N/mm^2
Gvožđe GG20 Cast iron Gg20	Tvrdoća	Hardness	190-205 HB
	Izduženje	Elongation	
	Sila pucanja	Ultim. tens. strength	200 N/mm^2
Izrađeni čelik ST 37 steel fabricated St37	Tvrdoća	Hardness	106 HB
	Abrazija	Abrasion	8-12%
	Sila pucanja	Ultim. tens. strength	340-470 N/mm^2
Standardna guma Rubber tandard	Tvrdoća	Hardness	79-87 shA
	Abrazija	Abrasion	370-480 mm^3
	Sila pucanja	Ultim. tens. strength	4-4,5 N/mm^2
Guma meka, elastična Rubber soft elastic	Tvrdoća	Hardness	65-75 shA
	Abrazija	Abrasion	300-350 mm^3
	Sila pucanja	Ultim. tens. strength	12-14 N/mm^2

Technical characteristics of the materials mostly used in the manufacturing of the wheels

Korišteni materijali Material used	Svojstvo	Property	Value Value
Meka elastična guma TPE	Tvrdoća	Hardness	86 shA
	Abrazija	Abrasion	300 mm³
	Sila pucanja	Ultim. tens. strength	11 N/mm²
Polipropilen Polypropylene	Modul za savijanje	Bending modulus	1000-1500 MPa
	Izduženje	Elongation	300-350 %
	Točka prinosa	Yield point	24 MPa
Poliamid tip 6 Polyamide 6	Modul za savijanje	Bending modulus	750-2700 N/mm²
	Izduženje	Elongation	200-300%
	Točka prinosa	Yield point	40-80 N/mm²
Poliamid + staklena vlakna Polyamide + fiber glass	Modul za savijanje	Bending modulus	4800-9000 N/mm²
	Izduženje	Elongation	3-3,5%
	Sila pucanja	Tensile strength	100-170 N/mm²
Termoplastični poliuretan (brizgani) Thermoplastic polyurethane (injected)	Tvrdoća	Hardness	92-98 shA
	Izduženje	Elongation	35 mm³
	Sila pucanja	Ultim. tens. strength	50 N/mm2
Cast poliurethane Cast polyurethane	Tvrdoća	Hardness	90-96 shA
	Abrazija	Abrasion	50 mm³
	Sila pucanja	Ultim. tens. strength	40 N/mm²
Thermoset smola Thermoset resin	Sabijanje	Compression	280 MPa
	Elastičnost	Elasticity	12 GPa
	Udar	Impact	11 KJ/m²

Napomena: gore navedene brojke mogu se promijeniti bez prethodnog upozorenja.
Note: The above figures could change without any previous notice

NAČINI MONTAŽE TOČKOVA
CASTOR MOUNTING OPTIONS

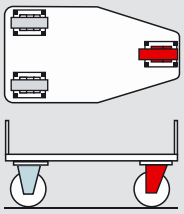

Ws= (WT+P)x0.4
Wf= (WT+P)x0.35

Opcija A

2 fiksna +1 okretni

Za male fleksibilne konstrukcije sa malim težinama. Rukovanje sa strane okretnog točka.

Option A

2 fixed + 1 swivel

For small flexible constructions with light weights. Handling from the side of the swivel castor

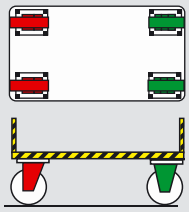

Ws= (WT+P)x0.35
Wf= (WT+P)x0.35

Opcija B

2 zakretna + 2 fiksirana na rubovima kolica

U primenama sa relativno velikim opterećenjima i velikim udaljenostima. Rukovanje sa strane okretnih tockova.

Option B

2 swivel + 2 fixed at the edges of the trolley

In applications with relatively high loads and long distances Handling from the side of the swivel castors

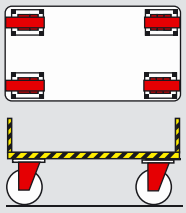

Ws= (WT+P)x0.35
Wf= (WT+P)x0.35

Opcija C

4 okretna na rubovima kolica

Maksimalna upravljivost sa rukovanjem sa bilo koje strane. U slučaju velikih opterećenja, ne preporučuje se za velike udaljenosti.

Option C

4 swivel at the edges of the trolley.

Maximum maneuverability with handling from any side. In case of heavy loads, it is not recommended for long distances.

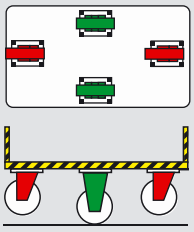

(*)

Ws= (WT+P)x0.35
Wf= (WT+P)x0.50

Opcija D

2 okretna + 2 fiksna u sredini kolica.

Rukovanje sa strane okretnih tockova. Fiksni točkovi se obično postavljaju više od okretnog, tako da je konstrukcija na njima izbalansirana. Fleksibilna konstrukcija za velike udaljenosti na podovima sa kanalima i rampama, ali nestabilna kada je gravitaciona tačka opterećenja.

Option D

2 swivel + 2 fixed in the middle of the trolleys sides.

Handling from the side of the swivel castors
The fixed castors are usually placed higher than the swivel, so that the construction is being balanced on them.Flexible construction for long distances on floors with channels and ramps but unstable when the gravity point of the load is high.

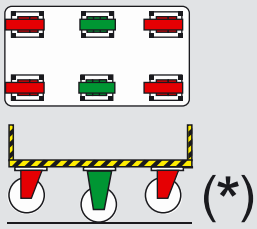

Opcija E

2 fiksna u sredini dužih strana + 4 okreta na rubovima kolica

Rukovanje sa strane okretnih točkova. Fiksni točkovi su obicno postavljeni više od okretnog točka, tako da je konstrukcija na njima izbalansirana. Fleksibilna i stabilna konstrukcija za velike udaljenosti na podovima sa kanalima I rampama.

Option E

2 fixed in the middle of the long sides + 4 swivel at the edges of the trolley.

Handling from the side of the swivel castors. The fixed castors are usually placed higher than the swivel, so that the construction is being balanced on them. Flexible and stable construction for long distances on floors with channels and ramps.

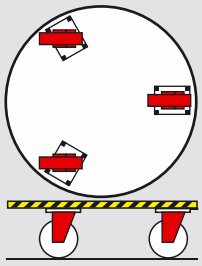

Ws= (WT+P)x0.35

Opcija F

3 okretna točka raspoređena u trougao

za kružna kolica ili burad.

Option F

3 swivel at triangle disposition

for circular trolleys or barrels.

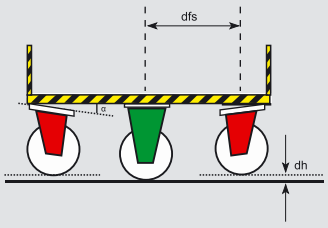

tana = dh / dfs

tana = dh / dfs

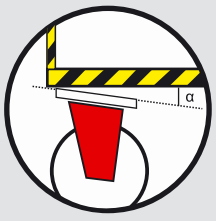

(*) U opcijama **D** i **E** montažna gornja ploča zakretnih točkića ne bi trebala **biti u paralelnom položaju s podom kolica**, ali mora imati odgovarajuci nagib, tako da je u horizontalnom položaju.

dh = ukupna razlika visine u okretnim i fiksnim točkovima.

dfs = udaljenost između središnje tačke montažnih gornjih ploča okretnog momenta do fiksnog točka.

(*) In options **D** and **E** the fitting top plate of the swivel castors **should not be in parallel position with the floor** of the trolley, but it must have the appropriate inclination, so as to be in horizontal position, while the wheel is in contact with the ground.

dh = total height difference within swivel and fixed castors

dfs = distance in between the center points of the fitting top plates of the swivel to the fixed castor.

Characters ekplanation

Vs = Nosivost obrtnog tocka
Vf = Nosivost fiksnog tocka
VT = Maksimalna težina koju treba nositi
P = Težina (tare) kolica

Characters explanation

Ws = Load capacity of the swivel castor
Wf = Load capacity of the fixed castor
WT = Maximum weight to be carried
P = Deadweight (tare) of the trolley.

OPIS PODRŠKE
DESCRIPTION OF THE SUPPORT

1

80 - 280 mm | max = 550 kg

- Presovani čelik pocinkovan
- Dvostruki čelični kanal sa kuglicama
- Prsten za zaštitu od prašine

- Pressed steel zinc plated
- Double steel ball race
- Dust protective ring

X

80 - 200 mm | max = 300 kg

- Nerđajući čelik AISI 304
- Dvostruki čelični kanal sa kuglicama od nerđajućeg čelika AISI 420
- Prsten za zaštitu od prašine

- Stainless steel AISI 304
- Double stainless steel ball race AISI 420
- Dust protective ring

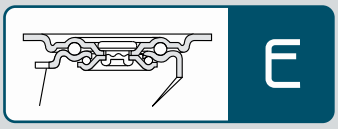

E

100 - 125 mm | max = 250 kg

- Presovani čelik pocinkovan
- Dvostruki čelični kanal sa kuglicama
- Prsten za zaštitu od prašine

- Pressed steel zinc plated
- Double steel ball race
- Dust protective ring

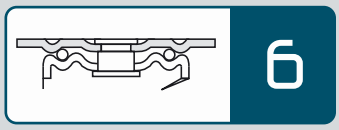

6

50-150 mm | max = 360 kg

- Presovani čelik pocinkovan
- Jednostruki čelični kanal sa kuglicama

- Pressed steel zinc plated
- Single steel ball race

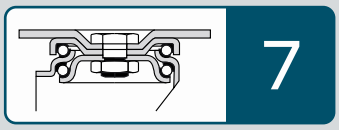

7

80-250 mm | max = 1200 kg

- Presovani čelik pocinkovan
- Dvostruki čelični kanal sa kuglicama na specijalnim kaljenim čeličnim prstenovima

- Pressed steel zinc plated
- Double steel ball race on special hardened steel rings

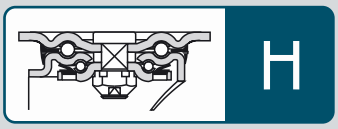

H

100-250 mm | max = 1000 kg

- Presovani čelik, cink pasiviziran
- Dvostruki čelični kanal sa kuglicama i specijalnim kaljenim čeličnim prstenovima
- Prstenovi otporni na vodu štite sklop okretne glave

- Pressed steel, zinc plated
- Double steel ball race on special hardened steel rings
- Water resistant rings protecting the swivel head assembly

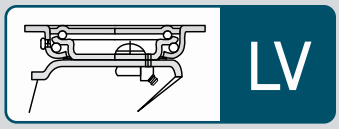

LV

100-250 mm | max = 1000 kg

- Presovani čelik pocinkovan
- Dvostruki kaljeni čelični kanal sa kuglicama
- Prsten za zaštitu od prašine I vode
- Otporna na vodu sa mazalicom

- Pressed steel zinc plated
- Double steel ball race on special hardened channels
- Dust and water protective ring
- Water resistant with grease nipple

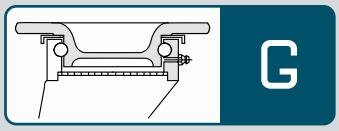

G

100-250 mm | max = 1400 kg

- Izrađena konstrukcija od nodularnog liva I čelika
- Jednostruki specijalno kaljeni čelični kanal sa kuglicama
- Prsten za zaštitu od prašine I vode
- Otporna na vodu sa mazalicom

- Nodular cast iron and steel fabricated construction
- Single steel ball race on special hardened channels
- Dust and water protective rings
- Water resistant with grease nipple

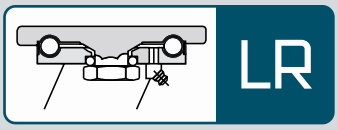

LR

100-300 mm | max = 2000 kg

- Izrađena konstrukcija od kovanog čelika I čelika
- Čelična kugla na specijalnim očvrsnutim kanalima i sklop potisnog ležaja
- Prsten za zaštitu od prašine I vode
- Otporna na vodu sa mazalicom

- Forged steel and steel fabricated construction
- Steel ball race on special hardened channels and thrust bearing assembly
- Dust and water protective ring
- Water resistant with grease nipple

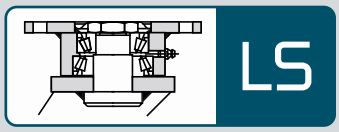

LS

200-300 mm | max = 3000 kg

- Izrađena konstrukcija od kovanog čelika I čelika
- Dvostruki konusni teški valjkasti ležajevi
- Grease nipple

- Forged steel and steel fabricated construction
- Double tapered heavy roller bearings
- Grease nipple

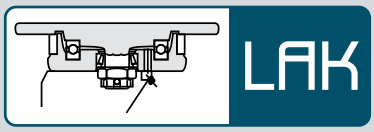

LAK

100-350 mm | max = 5000 kg

- Kovani čelik i čelik proizveden, konstrukcija
- Aksijalni precizni kuglični ležaj kombinovan sa konusnim valjkastim ležajem
- Grease nipple

- Forged steel and steel fabricated construction
- Axial precision ball bearing combined with tapered roller bearing
- Grease nipple

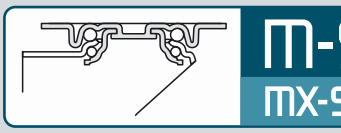

M-S
MX-SX

36-150 mm | max = 100 kg

- Presovani čelik pocinkovani ili nerđajući čelik AISI 304
- Dvostruka čelična ili inok AISI 420 staza za kuglice ležaja

- Pressed steel zinc plated or stainless steel AISI 304
- Double steel or stainless steel AISI 420 ball race

OTPOR KOTRLJANJA
ROLLING RESISTANCE

Otpor kotrljanja je faktor koji određuje kako se "lako" točak kotrlja pod određenim opterećenjem.

Prema ergonomiji *(nauka koja primenjuje uslove rada na sposobnosti ljudskog tela)*, sila za guranje kolica ne bi trebala biti veća od 16 kg kada počnemo da ih pomeramo, ili više od 12kg dok ih okrećemo.

Faktori koji utiču na otpor kotrljanja u pogledu radnih uslova su:

- težina I
- stanje poda,

a kada je u pitanju točak:

- materijal osovine I
- tip točka

kao što je prikazano na dijagramu

Rolling resistance is a factor that defines how "easily" a wheel rolls under a certain load.

According to ergonomy (*science which applies the working conditions to the abilities of the human body*) the force to push a trolley should not be more than 16kgs when we start moving it, or more than 12 kgs while we roll it.

Factors that affect the rolling resistance regarding the working conditions are :

- the carrying weight and
- the situation of the floor

and regarding the wheel are:

- the material of the axle and
- the tyre of the wheel

as shown in the diagram

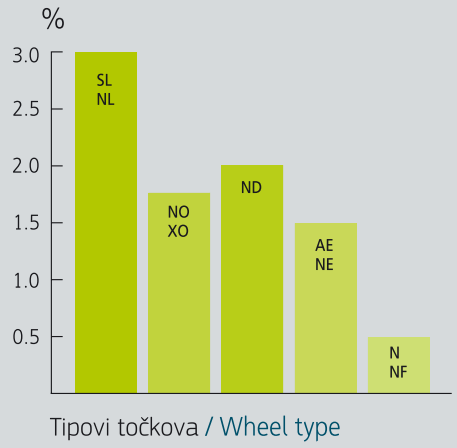

gore navedene brojke odnose se na točkove prečnika 200mm sa kugličnim ležajem na glatkom podu

The figures above concern wheels having diameter 200mm with ball bearing axle on smooth floor

TEST
TEST

Moguće je, na zahtjev, da se točak testira na ispitnom uređaju koji simulira njegove radne uslove, te potvrđuje njegovu prikladnost za određenu primjenu.

it is possible on request, for a castor to be tested in a testing device simulating its working conditions, and certify its suitability for a specific application.

SADRŽAJ
CONTENTS

Strana / Page 1.1-1.3 — SL — 80-400mm — max = 475kg
Strana / Page 1.5-1.8 — NL — 80-200mm — max = 205kg
Strana / Page 1.9-1.13 — AE — 100-300mm — max = 800kg
Strana / Page 1.15-1.20 — NE — 100-250mm — max = 500kg
Strana / Page 1.21-1.23 — XE — 125-620mm — max = 3000kg
Strana / Page 1.25-1.26 — PN — 200-406mm — max = 250kg
Strana / Page 2.1-2.4 — PA — 80-200mm — max = 205kg
Strana / Page 2.5-2.11 — N — 80-250mm — max = 1700kg
Strana / Page 2.13-2.15 — NF — 80-200mm — max = 1000kg
Strana / Page 2.17-2.19 — FN — 80-200mm — max = 370kg
Strana / Page 3.1-3.8 — ND — 80-250mm — max = 800kg
Strana / Page 3.9-3.14 — AO — 100-250mm — max = 1000kg
Strana / Page 3.15-3.18 — AOE — 100-250mm — max = 800kg
Strana / Page 3.19-3.24 — XO — 80-500mm — max = 5200kg

INDUSTRIJSKE APLIKACIJE
INDUSTRIAL APPLICATIONS

Strana / Page 4.1-4.5 — TPA — 50-150mm — max = 100kg
Strana / Page 4.7-4.11 — PP — 40-150mm — max = 100kg
Strana / Page 4.12-4.16 — NA — 36-150mm — max = 100kg

INSTITUCIONALNE APLIKACIJE
INSTITUTIONAL APPLICATIONS

Strana / Page 5.1 — FR — 40-50mm — max = 30kg
Strana / Page 5.2 — MR — 15-45mm — max = 50kg

PRIMENA ZA NAMEŠTAJ
FURNITURE APPLICATIONS

Strana / Page 6.1-6.3 — HC — 175-650mm — max = 80kg
Strana / Page 6.5-6.10 — NSP — 100-200mm — max = 160kg
Strana / Page 6.11 — NO — 100-200mm — max = 180kg

PRIMENA U BOLNICAMA
HOSPITAL APPLICATIONS

PRIMENA KOD VILJUŠKARA
PALLET TRUCKS APPLICATIONS

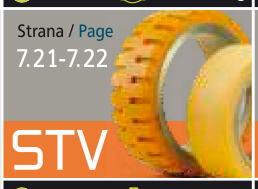

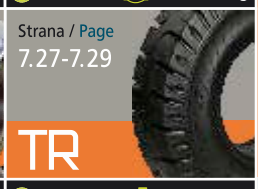

BALL UNITS
BALL UNITS

GROOVE VHEELS
GROOVE WHEELS

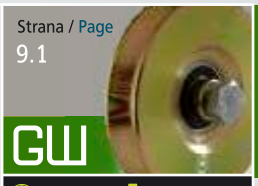

PALETARI
HAND PALLET TRUCKS

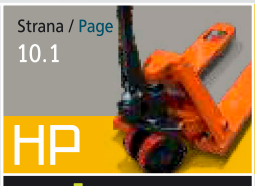

RUČNA KOLICA
HAND TRUCKS

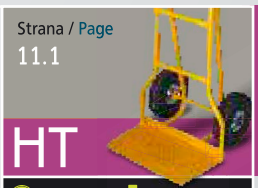

OBJAŠNJENJE SIMBOLA
SYMBOLS EXPLANATION

Prečnik točka
Wheel diameter

Velicina navoja
Tread width

Prečnik čašice
Hub diameter

Hub length
Hub length

Type of axle bearing
Type of axle bearing

Ukupna visina
Overall height

Dimenzije gornje ploče
Top plate dimensions

Razmak između otvora za vijke
Bolt hole spacing

Prečnik rupa za montažu
Fitting holes diameter

Ofset
Offset

Radijus okretanja (sa prednjom kočnicom)
Swivel radius (with front brake)

Radijus okretanja (sa zadnjim zaustavljanjem)
Swivel radius (with back stop)

Prečnik rupe za vijak
Bolt hole diameter

Dimenzije stezaljki
Stem fitting dimensions

Osovina kliznog ležaja
Plain bearing axle

Osovina valjkastog ležaja
Roller bearing axle

Inoks valjkasti ležaj
Inox roller bearing

Osovina kugličnog ležaja
Ball bearing axle

Kuglična osovina Inoks
Inox ball bearing axle

Osovina sa jednim kugličnim ležajem
Single Ball bearing axle

Kapacitet
Load capacity

Otpornost na hemikalije (*)
Resistance to chemicals (*)

Otpornost na udarce
Resistance to shocks

Otpornost na vlažne uslove
Resistance in wet conditions

Dug vijek trajanja
Long service life

Nizak otpor kotrljanja
Low rolling resistance

Raspon radnih temperatura
Working temperatures range

Pogodnost za neravne podove
Suitability for uneven floors

Relativno visoka nosivost
Relatively high load capacity

Električna provodnost
Electric conductive

Otpornost na visoke temperature
High temperature resistance

Aplikacije za hendikep
Handicap applications

Zabeleške

Gornji simboli se pojavljuju u ovom obliku kada se navodi pogodnost za opisane uslove.

U suprotnom se preporučuje da se ne koristi za opisane uslove.

Gornji simboli su indikativni za prikladnost opisane stavke u ručno upravljanim aplikacijama pri brzini manjoj od 4 km / h prema EN 12527.

(*) odnosi se na uobičajene kiseline i baze u niskim koncentracijama i slabim rastvaračima. U svakom slučaju, preporučuje se da nas obavestite o specifičnim jedinjenjima i njihovoj koncentraciji kako biste potvrdili ili ne, pogodnost za specifičnu primenu.

Notes

The symbols above appear in this form when specifying the suitability for the described condition.

Otherwise it is recommended not to be used for the described condition.

The symbols above are indicative for the suitability of the described item in hand driven applications at a speed of less than 4 km/h according to EN 12527

(*) It is referred to common acids and bases in low concentration and weak solvents. In any case its is highly recommended to inform us on the specific compounds and their concentration in order to confirm or no, the suitability for the specific application.

SERIJA SERIES SL

- Čvrsta crna guma
- Presovani čelični centar
- Osovinski ležaj

Valjak [R]

Specijalna jedinjenja:
- Siva bez oznaka
- Antistatic

- Solid black rubber
- Pressed steel center
- Axle bearing:

roller [R]

SPECIAL COMPOUNDS
- Grey non marking
- Antistatic

+80
-15
°C

					kg	CODE
080	25	12	40		50	WL-080-SL.R12
100	30	12	40		70	WL-100-SL.R12
125	37,5	15	46		100	WL-125-SL.R15
140	37,5	15	46		115	WL-140-SL.R15
150	40	15	46		125	WL-150-SL.R15
160	40	20	60		135	WL-160-SL.R20
180	45	20	60		170	WL-180-SL.R20
200	50	20	60		205	WL-200-SL.R20
250	60	25	60		295	WL-250-SL.R25
250S	60	25	75		295	WL-250S-SL.R25
280	70	25	75		385	WL-280-SL.R25
400	80	25	75		475	WL-400-SL.R25

rodasa

SL

SERIJA
SERIES

podrška
support 1

strana.page.11

									kg			
080	25	105x85	80x60	9	108	38	120		50	1-080-SL.R-TS	1-080-SL.R-TF	1-080-SL.R-TSBK
100	30	105x85	80x60	9	128	38	120		70	1-100-SL.R-TS	1-100-SL.R-TF	1-100-SL.R-TSBK
125	37,5	105x85	80x60	9	155	45	120		100	1-125-SL.R-TS	1-125-SL.R-TF	1-125-SL.R-TSBK
140	37,5	105x85	80x60	9	178	45	120		115	1-140-SL.R-TS	1-140-SL.R-TF	1-140-SL.R-TSBK
150	40	105x85	80x60	9	183	45	120		125	1-150-SL.R-TS	1-150-SL.R-TF	1-150-SL.R-TSBK
160	40	135x110	105x80	11	199	55	146		135	1-160-SL.R-TS	1-160-SL.R-TF	1-160-SL.R-TSBK
180	45	135x110	105x80	11	219	55	146		170	1-180-SL.R-TS	1-180-SL.R-TF	1-180-SL.R-TSBK
200	50	135x110	105x80	11	239	55	146		205	1-200-SL.R-TS	1-200-SL.R-TF	1-200-SL.R-TSBK
250	60	135x110	105x80	11	290	55	146		295	1-250-SL.R-TS	1-250-SL.R-TF	1-250-SL.R-TSBK
250S	60	200x160	160x120	14	305	90	-		295	1-250S-SL.R-TS	1-250S-SL.R-TF	-
280	70	200x160	160x120	14	320	90	-		385	1-280-SL.R-TS	1-280-SL.R-TF	-

Za svaki drugi tip kočnice, dodajte njegov specifični opis na kraju relativne šifre sa gornjom pločom

Primer: **1-200-SL.R-TS** sa gornjom pločom
1-200-SL.R-TSFA sa gornjom pločom i centralnom bravom
1-200-SL.R-TSFP sa gornjom i zadnjom pločom

For each different type of brake, add its specific description at the end of the relative code with top plate

Example: **1-200-SL.R-TS** with top plate
1-200-SL.R-TSFA with top plate and central lock
1-200-SL.R-TSFP with top plate and back stop

rodasa

								kg				
080	25	12	20x50	104	38	120		50	1-080-SL.R-HS	1-080-SL.R-HSBK	1-080-SL.R-FRS	1-080-SL.R-FRSBK
100	30	12	20x50	124	38	120		70	1-100-SL.R-HS	1-100-SL.R-HSBK	1-100-SL.R-FRS	1-100-SL.R-FRSBK
125	37,5	12	22x50	151	45	120		100	1-125-SL.R-HS	1-125-SL.R-HSBK	1-125-SL.R-FRS	1-125-SL.R-FRSBK
140	37,5	12	22x50	174	45	120		115	1-140-SL.R-HS	1-140-SL.R-HSBK	1-140-SL.R-FRS	1-140-SL.R-FRSBK
150	40	12	22x50	179	45	120		125	1-150-SL.R-HS	1-150-SL.R-HSBK	1-150-SL.R-FRS	1-150-SL.R-FRSBK
160	40	16	27x60	193	55	146		135	1-160-SL.R-HS	1-160-SL.R-HSBK	1-160-SL.R-FRS	1-160-SL.R-FRSBK
180	45	16	27x60	213	55	146		170	1-180-SL.R-HS	1-180-SL.R-HSBK	1-180-SL.R-FRS	1-180-SL.R-FRSBK
200	50	16	27x60	233	55	146		205	1-200-SL.R-HS	1-200-SL.R-HSBK	1-200-SL.R-FRS	1-200-SL.R-FRSBK

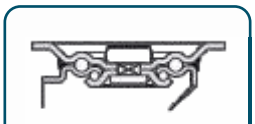

podrška
support 1

strana.page.11

roda s a

ZABELEŠKE | NOTES

SERIJA SERIES NL

- Puna crna guma
- Plastični kalup za brizganje plastike
- Ležaj osovine

Biksna [B]
Valjkasti [R]
inoks valjkasti [RX]

SPECIJALNA JEDINJENJA:
- Siva bez oznaka

- Solid black rubber
- Plastic center injection moulded
- Axle bearing:

plain [B]
roller [R]
inox roller [RX]

SPECIAL COMPOUNDS
- Grey non marking

					kg	CODE
080	25	12	40		50	WL-080-NL.B12
	25	12	40		50	WL-080-NL.R12
	25	12	40	X	50	WL-080-NL.RX12
100	30	12	40		70	WL-100-NL.B12
	30	12	40		70	WL-100-NL.R12
	30	12	40	X	70	WL-100-NL.RX12
125	37,5	15	46		100	WL-125-NL.B15
	37,5	15	46		100	WL-125-NL.R15
	37,5	15	46	X	100	WL-125-NL.RX15
140	37,5	15	46		115	WL-140-NL.B15
	37,5	15	46		115	WL-140-NL.R15
	37,5	15	46	X	115	WL-140-NL.RX15
150	40	15	46		125	WL-150-NL.B15
	40	15	46		125	WL-150-NL.R15
	40	15	46	X	125	WL-150-NL.RX15
160	40	20	60		135	WL-160-NL.B20
	40	20	60		135	WL-160-NL.R20
	40	20	60	X	135	WL-160-NL.RX20
180	45	20	60		170	WL-180-NL.B20
	45	20	60		170	WL-180-NL.R20
	45	20	60	X	170	WL-180-NL.RX20
200	50	20	60		205	WL-200-NL.B20
	50	20	60		205	WL-200-NL.R20
	50	20	60	X	205	WL-200-NL.RX20

rodasa

NL

SERIJA
SERIES

TS

TF

TSBK

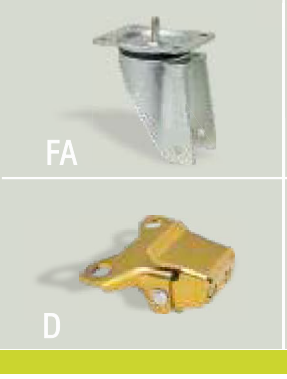
FA

IFA

D

FP

podrška support 1

strana.page.11

									kg			
080	25	105x85	80x60	9	108	38	120		50	1-080-NL.B-TS	1-080-NL.B-TF	1-080-NL.B-TSBK
									50	1-080-NL.R-TS	1-080-NL.R-TF	1-080-NL.R-TSBK
100	30	105x85	80x60	9	128	38	120		70	1-100-NL.B-TS	1-100-NL.B-TF	1-100-NL.B-TSBK
									70	1-100-NL.R-TS	1-100-NL.R-TF	1-100-NL.R-TSBK
125	37,5	105x85	80x60	9	155	45	120		100	1-125-NL.B-TS	1-125-NL.B-TF	1-125-NL.B-TSBK
									100	1-125-NL.R-TS	1-125-NL.R-TF	1-125-NL.R-TSBK
140	37,5	105x85	80x60	9	178	45	120		115	1-140-NL.B-TS	1-140-NL.B-TF	1-140-NL.B-TSBK
									115	1-140-NL.R-TS	1-140-NL.R-TF	1-140-NL.R-TSBK
150	40	105x85	80x60	9	183	45	120		125	1-150-NL.B-TS	1-150-NL.B-TF	1-150-NL.B-TSBK
									125	1-150-NL.R-TS	1-150-NL.R-TF	1-150-NL.R-TSBK
160	40	135x110	105x80	11	199	55	146		135	1-160-NL.B-TS	1-160-NL.B-TF	1-160-NL.B-TSBK
									135	1-160-NL.R-TS	1-160-NL.R-TF	1-160-NL.R-TSBK
180	45	135x110	105x80	11	219	55	146		170	1-180-NL.B-TS	1-180-NL.B-TF	1-180-NL.B-TSBK
									170	1-180-NL.R-TS	1-180-NL.R-TF	1-180-NL.R-TSBK
200	50	135x110	105x80	11	239	55	146		205	1-200-NL.B-TS	1-200-NL.B-TF	1-200-NL.B-TSBK
									205	1-200-NL.R-TS	1-200-NL.R-TF	1-200-NL.R-TSBK

Za svaki drugi tip kočnice, dodajte njegov specifični opis na kraju relativne šifre sa gornjom pločom

Primer: **1-200-NL.R-TS** sa gornjom pločom
1-200-NL.R-TSFA sa gornjom pločom i centralnom bravom
1-200-NL.R-TSFP sa gornjom i zadnjom pločom

For each different type of brake, add its specific description at the end of the relative code with top plate

Example: **1-200-NL.R-TS** with top plate
1-200-NL.R-TSFA with top plate and central lock
1-200-NL.R-TSFP with top plate and back stop

roda s a

								kg				
080	25	12	20x50	104	38	120		50	1-080-NL.B-HS	1-080-NL.B-HSBK	1-080-NL.B-FRS	1-080-NL.B-FRSBK
								50	1-080-NL.R-HS	1-080-NL.R-HSBK	1-080-NL.R-FRS	1-080-NL.R-FRSBK
100	30	12	20x50	124	38	120		70	1-100-NL.B-HS	1-100-NL.B-HSBK	1-100-NL.B-FRS	1-100-NL.B-FRSBK
								70	1-100-NL.R-HS	1-100-NL.R-HSBK	1-100-NL.R-FRS	1-100-NL.R-FRSBK
125	37,5	12	22x50	151	45	120		100	1-125-NL.B-HS	1-125-NL.B-HSBK	1-125-NL.B-FRS	1-125-NL.B-FRSBK
								100	1-125-NL.R-HS	1-125-NL.R-HSBK	1-125-NL.R-FRS	1-125-NL.R-FRSBK
140	37,5	12	22x50	173	45	120		115	1-140-NL.B-HS	1-140-NL.B-HSBK	1-140-NL.B-FRS	1-140-NL.B-FRSBK
								115	1-140-NL.R-HS	1-140-NL.R-HSBK	1-140-NL.R-FRS	1-140-NL.R-FRSBK
150	40	12	22x50	179	45	120		125	1-150-NL.B-HS	1-150-NL.B-HSBK	1-150-NL.B-FRS	1-150-NL.B-FRSBK
								125	1-150-NL.R-HS	1-150-NL.R-HSBK	1-150-NL.R-FRS	1-150-NL.R-FRSBK
160	40	16	27x60	193	55	146		135	1-160-NL.B-HS	1-160-NL.B-HSBK	1-160-NL.B-FRS	1-160-NL.B-FRSBK
								135	1-160-NL.R-HS	1-160-NL.R-HSBK	1-160-NL.R-FRS	1-160-NL.R-FRSBK
180	45	16	27x60	213	55	146		170	1-180-NL.B-HS	1-180-NL.B-HSBK	1-180-NL.B-FRS	1-180-NL.B-FRSBK
								170	1-180-NL.R-HS	1-180-NL.R-HSBK	1-180-NL.R-FRS	1-180-NL.R-FRSBK
200	50	16	27x60	233	55	146		205	1-200-NL.B-HS	1-200-NL.B-HSBK	1-200-NL.B-FRS	1-200-NL.B-FRSBK
								205	1-200-NL.R-HS	1-200-NL.R-HSBK	1-200-NL.R-FRS	1-200-NL.R-FRSBK

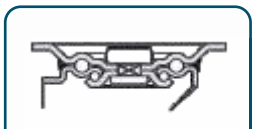

podrška
support 1

strana.page.11

NL

SERIJA
SERIES

podrška
support X

strana.page.11

									Kg			
080	25	105x85	80x60	9	108	38	120		50	X-080-NL.B-TS	X-080-NL.B-TF	X-080-NL.B-TSBK
									50	X-080-NL.RX-TS	X-080-NL.RX-TF	X-080-NL.RX-TSBK
100	30	105x85	80x60	9	128	38	120		70	X-100-NL.B-TS	X-100-NL.B-TF	X-100-NL.B-TSBK
									70	X-100-NL.RX-TS	X-100-NL.RX-TF	X-100-NL.RX-TSBK
125	37,5	105x85	80x60	9	155	45	120		100	X-125-NL.B-TS	X-125-NL.B-TF	X-125-NL.B-TSBK
									100	X-125-NL.RX-TS	X-125-NL.RX-TF	X-125-NL.RX-TSBK
150	40	105x85	80x60	9	183	45	120		125	X-150-NL.B-TS	X-150-NL.B-TF	X-150-NL.B-TSBK
									125	X-150-NL.RX-TS	X-150-NL.RX-TF	X-150-NL.RX-TSBK
160	40	135x110	105x80	11	199	55	146		135	X-160-NL.B-TS	X-160-NL.B-TF	X-160-NL.B-TSBK
									135	X-160-NL.RX-TS	X-160-NL.RX-TF	X-160-NL.RX-TSBK
180	45	135x110	105x80	11	219	55	146		170	X-180-NL.B-TS	X-180-NL.B-TF	X-180-NL.B-TSBK
									170	X-180-NL.RX-TS	X-180-NL.RX-TF	X-180-NL.RX-TSBK
200	50	135x110	105x80	11	239	55	146		205	X-200-NL.B-TS	X-200-NL.B-TF	X-200-NL.B-TSBK
									205	X-200-NL.RX-TS	X-200-NL.RX-TF	X-200-NL.RX-TSBK

rodasa

SERIJA SERIES AE

- **Mekana elastična** crna guma
- Ojačani aluminijumski centar
- Ležaj osovine:

Kuglični ležaj [S]

SPECIJALNA JEDINJENJA:

- Siva bez oznaka
- Antistatic

- **Soft elastic** black ruber
- Reinforced alluminum center
- Axle bearing:

ball [S]

SPECIAL COMPOUNDS

- Grey non marking
- Antistatic

					kg	CODE
100	40	12	40		180	WL-100-AE.S12
	40	15	40		180	WL-100-AE.S15
125	40	20	50		200	WL-125-AE.S20
	40	25	50		200	WL-125-AE.S25
125S	50	20	60		225	WL-125S-AE.S20
160	50	20	60		300	WL-160-AE.S20
	50	25	60		300	WL-160-AE.S25
180	50	20	60		400	WL-180-AE.S20
	50	25	60		400	WL-180-AE.S25
200	50	20	60		450	WL-200-AE.S20
	50	25	60		450	WL-200-AE.S25
230	50	25	60		500	WL-230-AE.S25
250	50	20	60		570	WL-250-AE.S20
	50	25	60		570	WL-250-AE.S25
250S	80	25	84		675	WL-250S-AE.S25
	80	30	84		675	WL-250S-AE.S30
280S	75	25	83		700	WL-280S-AE.S25
300	60	25	60		700	WL-300-AE.S25
	60	30	60		700	WL-300-AE.S30
300S	80	30	83		800	WL-300S-AE.S30

rodasa

AE SERIJA SERIES

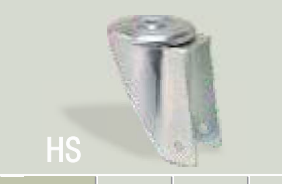

	100	125	125 S	160	180	200
	12mm	12mm	16mm	16mm	16mm	16mm

	100	125	125 S	160	180	200
	20x50	22x50	27x60	27x60	27x60	27x60

podrška support 1

strana.page.11

									kg			
100	40	105x85	80x60	9	128	38	120		120	1-100-AE.S-TS	1-100-AE.S-TF	1-100-AE.S-TSBK
125	40	105x85	80x60	9	155	45	120		200	1-125-AE.S-TS	1-125-AE.S-TF	1-125-AE.S-TSBK
125S	50	135x110	105x80	11	164	55	146		225	1-125S-AE.S-TS	1-125S-AE.S-TF	1-125S-AE.S-TSBK
160	50	135x110	105x80	11	199	55	146		300	1-160-AE.S-TS	1-160-AE.S-TF	1-160-AE.S-TSBK
180	50	135x110	105x80	11	219	55	146		300	1-180-AE.S-TS	1-180-AE.S-TF	1-180-AE.S-TSBK
200	50	135x110	105x80	11	239	55	146		300	1-200-AE.S-TS	1-200-AE.S-TF	1-200-AE.S-TSBK
230	50	135x110	105x80	11	268	55	-		300	1-230-AE.S-TS	1-230-AE.S-TF	-
250	50	135x110	105x80	11	290	55	146		300	1-250-AE.S-TS	1-250-AE.S-TF	1-250-AE.S-TSBK

Za svaki različiti tip fitinga, zamenite -TS od relativne šifre sa gornjom pločom, sa specifičnim opisom (-HS za rupu za vijke, -FRS za stub)

Primer: **1-100-AE.S-TS** sa gornjom pločom
1-100-AE.S-HS s otvorom za vijak
1-100-AE.S-FRS sa stablom

Za kočnicu, dodajte BK na kraju relativnog koda

Primer: **1-100-AE.S-HS** sa rupom za vijke
1-100-AE.S-HSBK sa otvorom za vijke i kočnicom

For each different type of fitting, substitute –TS from the relative code with top plate, with the specific description (-HS for bolt hole -FRS for stem)

Example: 1-100-AE.S-**TS** with top plate
1-100-AE.S-**HS** with bolt hole
1-100-AE.S-**FRS** with stem

For brake, add –BK at the end of the relative code

Example: 1-100-AE.S-**HS** with bolt hole
1-100-AE.S-**HSBK** with bolt hole and brake

roda s a

strana.page.11

									Kg			
125	40	105x85	80x60	9	160	40	104		200	7-125-AE.S-TS	7-125-AE.S-TF	7-125-AE.S-TSFP
160	50	140x110	105x80	11	205	52	139		300	7-160-AE.S-TS	7-160-AE.S-TF	7-160-AE.S-TSFP
180	50	140x110	105x80	11	235	55	130		400	7-180-AE.S-TS	7-180-AE.S-TF	7-180-AE.S-TSFP
200	50	140x110	105x80	11	243	55	130		450	7-200-AE.S-TS	7-200-AE.S-TF	7-200-AE.S-TSFP
250	50	200x160	160x120	11	310	63	133		570	7-250-AE.S-TS	7-250-AE.S-TF	7-250-AE.S-TSFP

strana.page.11

									Kg			
100	40	135X110	105X80	11	148	55	110		180	H-100-AE.S-TS	H-100-AE.S-TF	H-100-AE.S-TSFP
125	40	135X110	105X80	11	175	55	110		200	H-125-AE.S-TS	H-125-AE.S-TF	H-125-AE.S-TSFP
125S	50	135x110	105x80	11	175	55	110		225	H-125S-AE.S-TS	H-125S-AE.S-TF	H-125S-AE.S-TSFP
160	50	135x110	105x80	11	205	58	110		300	H-160-AE.S-TS	H-160-AE.S-TF	H-160-AE.S-TSFP
180	50	135x110	105x80	11	240	65	110		400	H-180-AE.S-TS	H-180-AE.S-TF	H-180-AE.S-TSFP
200	50	135x110	105x80	11	250	65	110		450	H-200-AE.S-TS	H-200-AE.S-TF	H-200-AE.S-TSFP
250	50	135x110	105x80	11	300	65	110		570	H-250-AE.S-TS	H-250-AE.S-TF	H-250-AE.S-TSFP

AE SERIJA SERIES

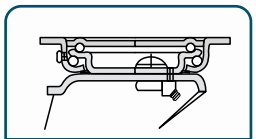

podrška support **LV**

strana.page.11

									Kg			
100	40	100x85	80x60	9	128	40	95		180	LV-100-AE.S-TS	LV-100-AE.S-TF	LV-100-AE.S-TSFP
125	40	135x110	105X80	11	178	50	140		200	LV-125-AE.S-TS	LV-125-AE.S-TF	LV-125-AE.S-TSFP
160	50	135x110	105x80	11	215	53	140		300	LV-160-AE.S-TS	LV-160-AE.S-TF	LV-160-AE.S-TSFP
180	50	135x110	105x80	11	225	53	140		400	LV-180-AE.S-TS	LV-180-AE.S-TF	LV-180-AE.S-TSFP
200	50	135x110	105x80	11	245	65	140		450	LV-200-AE.S-TS	LV-200-AE.S-TF	LV-200-AE.S-TSFP
230	50	135x110	105X80	11	270	64	140		500	LV-230-AE.S-TS	LV-230-AE.S-TF	LV-230-AE.S-TSFP
250	50	135x110	105x80	11	297	67	140		570	LV-250-AE.S-TS	LV-250-AE.S-TF	LV-250-AE.S-TSFP

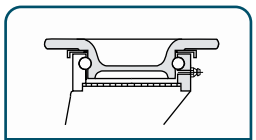

podrška support **LLAK**

strana.page.11

									Kg			
100	40	135x110	105x80	11	148	42	110		180	LLAK-100-AE.S-TS	LLAK-100-AE.S-TF	LLAK-100-AE.S-TSFP
125S	50	135x110	105X80	11	170	50	130		250	LLAK-125-AE.S-TS	LLAK-125-AE.S-TF	LLAK-125-AE.S-TSFP
200	50	135x110	105x80	11	245	65	130		450	LLAK-200-AE.S-TS	LLAK-200-AE.S-TF	LLAK-200-AE.S-TSFP
250	50	135x110	105x80	11	305	80	135		570	LLAK-250-AE.S-TS	LLAK-250-AE.S-TF	LLAK-250-AE.S-TSFP

roda s a

strana.page.11

									Kg			
100	40	105x85	80x60	9	145	41	110		180	LR-100-AE.S-TS	LR-100-AE.S-TF	LR-100-AE.S-TSFP
125S	50	135x110	105x80	11	170	50	130		250	LR-125S-AE.S-TS	LR-125S-AE.S-TF	LR-125S-AE.S-TSFP
160	50	135x110	105x80	11	205	55	130		300	LR-160-AE.S-TS	LR-160-AE.S-TF	LR-160-AE.S-TSFP
180	50	135x110	105x80	11	235	60	130		400	LR-180-AE.S-TS	LR-180-AE.S-TF	LR-180-AE.S-TSFP
200	50	135x110	105x80	11	245	60	130		450	LR-200-AE.S-TS	LR-200-AE.S-TF	LR-200-AE.S-TSFP
230	50	135x110	105x80	11	295	72	135		500	LR-230-AE.S-TS	LR-230-AE.S-TF	LR-230-AE.S-TSFP
250	50	135x110	105x80	11	305	72	130		570	LR-250-AE.S-TS	LR-250-AE.S-TF	LR-250-AE.S-TSFP
250S	80	200x160	160x120	15	310	72	135		675	LR-250S-AE.S-TS	LR-250S-AE.S-TF	LR-250S-AE.S-TSFP
280S	75	200x160	160x120	15	325	72	135		700	LR-280S-AE.S-TS	LR-280S-AE.S-TF	LR-280S-AE.S-TSFP
300S	80	175x140	140x105	15	340	76	135		800	LR-300S-AE.S-TS	LR-300S-AE.S-TF	LR-300S-AE.S-TSFP

ZABELEŠKE | NOTES

SERIJA SERIES NE

- **Mekana elastična** guma bez oznaka
- Najlon 6 center
- Ležaj osovine

Valjkasti [R]
inoks valjkasti [RX]
kuglični [S]
inoks kuglični [SX]

- **Soft elastic** non marking rubber
- NYLON 6 center
- Axle bearing:

roller [R]
inox roller [RX]
ball [S]
inox ball [SX]

					kg	CODE
100	32	12	40		160	WL-100-NE.R12
	32	12	40		160	WL-100-NE.RX12
100 S	38	15	45		200	WL-100S-NE.R15
	38	15	47		200	WL-100S-NE.S15
	38	15	47		200	WL-100S-NE.SX15
125	40	15	45		225	WL-125-NE.R15
	40	15	45		225	WL-125-NE.RX15
	40	15	47		225	WL-125-NE.S15
	40	15	47		225	WL-125-NE.SX15
160	50	20	60		300	WL-160-NE.R20
	50	20	60		300	WL-160-NE.RX20
	50	20	61		300	WL-160-NE.S20
	50	20	61		300	WL-160-NE.SX20
200	50	20	60		400	WL-200-NE.R20
	50	20	60		400	WL-200-NE.RX20
	50	20	61		400	WL-200-NE.S20
	50	20	61		400	WL-200-NE.SX20
	50	25	61		400	WL-200-NE.S25
250	50	20	61		500	WL-250-NE.S20
	50	20	61		500	WL-250-NE.SX20
	50	25	61		500	WL-250-NE.S25

rodasa

NE SERIJA SERIES

	100	125	160	200
	12mm	12mm	16mm	16mm

	100	125	160	200
	20x50	22x50	27x60	27x60

podrška support 1

strana.page.11

									kg			
100	32	105x85	80x60	9	128	38	120		120	1-100-NE.R-TS	1-100-NE.R-TF	1-100-NE.R-TSBK
125	40	105x85	80x60	9	155	45	120		180	1-125-NE.R-TS	1-125-NE.R-TF	1-125-NE.R-TSBK
									180	1-125-NE.S-TS	1-125-NE.S-TF	1-125-NE.S-TSBK
160	50	135x110	105x80	11	199	55	146		300	1-160-NE.R-TS	1-160-NE.R-TF	1-160-NE.R-TSBK
									300	1-160-NE.S-TS	1-160-NE.S-TF	1-160-NE.S-TSBK
200	50	135x110	105x80	11	239	55	146		300	1-200-NE.R-TS	1-200-NE.R-TF	1-200-NE.R-TSBK
									300	1-200-NE.S-TS	1-200-NE.S-TF	1-200-NE.S-TSBK

Za svaki različiti tip fitinga, zamenite -TS od relativne šifre sa gornjom pločom, sa specifičnim opisom (-HS za rupu za vijke, -FRS za stub)

Primer: 1-100-NE.R-**TS** sa gornjom pločom
1-100-NE.R-**HS** s otvorom za vijak
1-100-NE.R-**FRS** sa stablom

Za kočnicu, dodajte BK na kraju relativnog koda

Primer: 1-100-NE.R-**HS** sa rupom za vijke
1-100-NE.R-**HSBK** sa otvorom za vijke i kočnicom

For each different type of fitting, substitute –TS from the relative code with top plate, with the specific description (-HS for bolt hole -FRS for stem)

Example: 1-100-NE.R-**TS** with top plate
1-100-NE.R-**HS** with bolt hole
1-100-NE.R-**FRS** with stem

For brake, add –BK at the end of the relative code

Example: 1-100-NE.R-**HS** with bolt hole
1-100-NE.R-**HSBK** with bolt hole and brake

roda s a

100	32	105x85	80x60	9	128	38	120		120	X-100-NE.RX-TS	X-100-NE.RX-TF	X-100-NE.RX-TSBK
125	40	105x85	80x60	9	155	45	120		180	X-125-NE.RX-TS	X-125-NE.RX-TF	X-125-NE.RX-TSBK
									180	X-125-NE.SX-TS	X-125-NE.SX-TF	X-125-NE.SX-TSBK
160	50	135x110	105x80	11	199	55	146		300	X-160-NE.RX-TS	X-160-NE.RX-TF	X-160-NE.RX-TSBK
									300	X-160-NE.SX-TS	X-160-NE.SX-TF	X-160-NE.SX-TSBK
200	50	135x110	105x80	11	239	55	146		300	X-200-NE.RX-TS	X-200-NE.RX-TF	X-200-NE.RX-TSBK
									300	X-200-NE.SX-TS	X-200-NE.SX-TF	X-200-NE.SX-TSBK

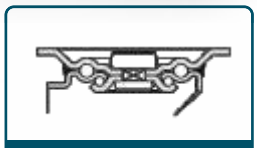

podrška
support X

strana.page.11

100S	38	105x85	80x60	8	128	28		200	E-100S-NE.R-TS	E-100S-NE.R-TF
								200	E-100S-NE.S-TS	E-100S-NE.S-TF
125	40	105x85	80x60	8	154	28		225	E-125-NE.R-TS	E-125-NE.R-TF
								225	E-125-NE.S-TS	E-125-NE.S-TF

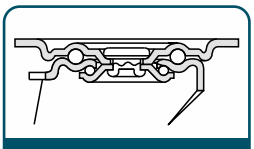

podrška
support E

strana.page.11

NE SERIJA SERIES

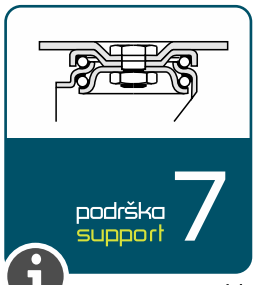

podrška support 7

strana.page.11

									Kg			
100	32	105x85	80x60	9	132	40	98		160	7-100-NE.R-TS	7-100-NE.R-TF	7-100-NE.R-TSFP
125	40	105x85	80x60	9	160	40	104		225	7-125-NE.R-TS	7-125-NE.R-TF	7-125-NE.R-TSFP
160	50	135x110	105x80	11	205	52	139		300	7-160-NE.R-TS	7-160-NE.R-TF	7-160-NE.R-TSFP
									300	7-160-NE.S-TS	7-160-NE.S-TF	7-160-NE.S-TSFP
200	50	135x110	105x80	11	243	55	130		400	7-200-NE.S-TS	7-200-NE.S-TF	7-200-NE.S-TSFP

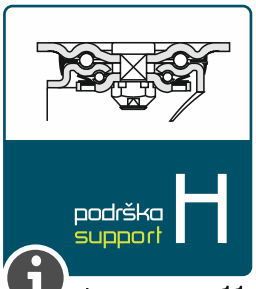

podrška support H

strana.page.11

									Kg			
160	50	135x110	105x80	11	205	58	110		300	H-160-NE.R-TS	H-160-NE.R-TF	H-160-NE.R-TSFP
									300	H-160-NE.S-TS	H-160-NE.S-TF	H-160-NE.S-TSFP
200	50	135x110	105x80	11	250	65	110		400	H-200-NE.R-TS	H-200-NE.R-TF	H-200-NE.R-TSFP
									400	H-200-NE.S-TS	H-200-NE.S-TF	H-200-NE.S-TSFP

roda s a

NE

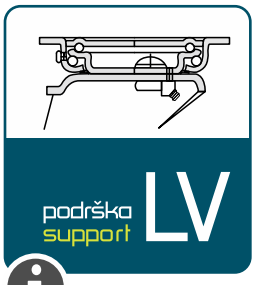

strana.page.11

									Kg			
100S	38	105x85	80x60	9	127	40	95		200	LV-100S-NE.R-TS	LV-100S-NE.R-TF	LV-100S-NE.R-TSFP
125	40	135x110	105x80	11	178	50	140		225	LV-125-NE.R-TS	LV-125-NE.R-TF	LV-125-NE.R-TSFP
160	50	135x110	105x80	11	215	53	140		300	LV-160-NE.R-TS	LV-160-NE.R-TF	LV-160-NE.R-TSFP
									300	LV-160-NE.S-TS	LV-160-NE.S-TF	LV-160-NE.S-TSFP
200	50	135x110	105x80	11	245	65	140		400	LV-200-NE.R-TS	LV-200-NE.R-TF	LV-200-NE.R-TSFP
									400	LV-200-NE.S-TS	LV-200-NE.S-TF	LV-200-NE.S-TSFP

strana.page.11

									Kg			
160	50	135x110	105x80	11	205	55	130		300	LR-160-NE.R-TS	LR-160-NE.R-TF	LR-160-NE.R-TSFP
									300	LR-160-NE.S-TS	LR-160-NE.S-TF	LR-160-NE.S-TSFP
200	50	135x110	105x80	11	245	60	130		400	LR-200-NE.R-TS	LR-200-NE.R-TF	LR-200-NE.R-TSFP
									400	LR-200-NE.S-TS	LR-200-NE.S-TF	LR-200-NE.S-TSFP

ZABELEŠKE | NOTES

SERIJA SERIES XE

- **Mekana elastična** crna guma
- Izrađeni centar od livenog gvožđa ili čelika
- Ležaj osovine

kugličasti [S]

- **Soft elastic** black rubber
- Cast iron or steel fabricated center
- Axle bearing:

ball [S]

					kg	CODE
125	50	20	60		225	WL-125-XE.S20
150	50	20	60		250	WL-150-XE.S20
160	50	20	60		300	WL-160-XE.S20
180	50	20	60		325	WL-180-XE.S20
	50	25	60		325	WL-180-XE.S25
200	50	20	60		350	WL-200-XE.S20
	50	25	60		350	WL-200-XE.S25
200S	75	25	90		500	WL-200S-XE.S25
230	50	25	60		450	WL-230-XE.S25
	50	30	60		450	WL-230-XE.S30
250	50	25	60		450	WL-250-XE.S25
250S	80	25	85		675	WL-250S-XE.S25
	80	30	85		675	WL-250S-XE.S30
280S	75	30	85		725	WL-280S-XE.S30
	75	35	85		725	WL-280S-XE.S35
300S	80	25	85		750	WL-300S-XE.S25
300X	100	35	120		975	WL-300X-XE.S35
	100	40	120		975	WL-300X-XE.S40
360	85	35	90		1050	WL-360-XE.S35
	85	40	90		1050	WL-360-XE.S40
400	75	35	90		1000	WL-400-XE.S35
425	150	40	160		1800	WL-425-XE.S40
500	85	40	90		1300	WL-500-XE.S40
550	120	45	130		1825	WL-550-XE.S45
550S	160	50	170		2250	WL-550S-XE.S50
620	200	50	210		3000	WL-620-XE.S50

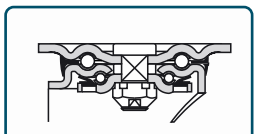

podrška support **H**

strana.page.11

									Kg			
125	50	135X110	105X80	11	175	55	110		225	H-125-XE.S-TS	H-125-XE.S-TF	H-125-XE.S-TSFP
150	50	135x110	105x80	11	200	55	110		250	H-150-XE.S-TS	H-150-XE.S-TF	H-150-XE.S-TSFP
160	50	135x110	105x80	11	205	58	110		300	H-160-XE.S-TS	H-160-XE.S-TF	H-160-XE.S-TSFP
180	50	135x110	105x80	11	240	65	110		325	H-180-XE.S-TS	H-180-XE.S-TF	H-180-XE.S-TSFP
200	50	135x110	105x80	11	250	65	110		350	H-200-XE.S-TS	H-200-XE.S-TF	H-200-XE.S-TSFP
250	50	135x110	105x80	11	300	65	110		450	H-250-XE.S-TS	H-250-XE.S-TF	H-250-XE.S-TSFP

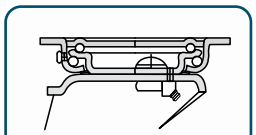

podrška support **LV**

strana.page.11

									Kg			
150	50	135x110	105X80	11	210	53	140		250	LV-150-XE.S-TS	LV-150-XE.S-TF	LV-150-XE.S-TSFP
160	50	135x110	105x80	11	215	53	140		300	LV-160-XE.S-TS	LV-160-XE.S-TF	LV-160-XE.S-TSFP
180	50	135x110	105x80	11	225	53	140		325	LV-180-XE.S-TS	LV-180-XE.S-TF	LV-180-XE.S-TSFP
200	50	135x110	105x80	11	245	65	140		350	LV-200-XE.S-TS	LV-200-XE.S-TF	LV-200-XE.S-TSFP
230	50	135x110	105X80	11	270	64	140		450	LV-230-XE.S-TS	LV-230-XE.S-TF	LV-230-XE.S-TSFP
250	50	135x110	105x80	11	297	67	140		450	LV-250-XE.S-TS	LV-250-XE.S-TF	LV-250-XE.S-TSFP

roda s a

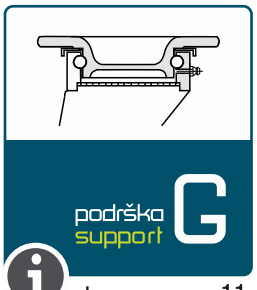

strana.page.11

125	50	150x110	105x80	11	177	56		225	G-125-XE.S-TS	G-125-XE.S-TF
150	50	150x110	105x80	11	202	59		250	G-150-XE.S-TS	G-150-XE.S-TF
160	50	150x110	105x80	11	207	59		300	G-160-XE.S-TS	G-160-XE.S-TF
180	50	150x110	105x80	11	242	66		325	G-180-XE.S-TS	G-180-XE.S-TF
200	50	150x110	105x80	11	252	66		350	G-200-XE.S-TS	G-200-XE.S-TF
230	50	150x110	105X80	11	293	82		450	G-230-XE.S-TS	G-230-XE.S-TF
250	50	150x110	105x80	11	303	82		450	G-250-XE.S-TS	G-250-XE.S-TF

strana.page.11

150	50	135x110	105x80	11	200	46	140		250	LR-150-XE.S-TS	LR-150-XE.S-TF	LR-150-XE.S-TSFP
160	50	135x110	105x80	11	205	46	140		300	LR-160-XE.S-TS	LR-160-XE.S-TF	LR-160-XE.S-TSFP
180	50	135x110	105x80	11	235	55	140		400	LR-180-XE.S-TS	LR-180-XE.S-TF	LR-180-XE.S-TSFP
200	50	135x110	105x80	11	245	55	140		450	LR-200-XE.S-TS	LR-200-XE.S-TF	LR-200-XE.S-TSFP
230	50	135x110	105x80	11	295	72	140		500	LR-230-XE.S-TS	LR-230-XE.S-TF	LR-230-XE.S-TSFP
250	50	135x110	105x80	11	305	72	140		570	LR-250-XE.S-TS	LR-250-XE.S-TF	LR-250-XE.S-TSFP
250S	80	175x145	140x105	13	305	69	160		675	LR-250S-XE.S-TS	LR-250S-XE.S-TF	LR-250S-XE.S-TSFP
300S	80	175x145	140x105	13	345	74	160		800	LR-300S-XE.S-TS	LR-300S-XE.S-TF	LR-300S-XE.S-TSFP
360	85	175x145	140x105	13	420	107	-		800	LR-360-XE.S-TS	LR-360-XE.S-TF	-
400	75	175x145	140x105	13	475	107	-		800	LR-400-XE.S-TS	LR-400-XE.S-TF	-

ZABELEŠKE | NOTES

SERIJA
SERIES

SPN NPN

- Crna guma, pneumatik
- Presovani čelik ili plastični centar
- Osovinski ležaj

  biksna [B]
  valjkasti [R]
  kuglični [S]

SPECIJALNI SASTOJCI:
- Guma ne obeležena sivom bojom

- Black rubber, pneumatic
- Pressed steel [SPN] or plastic center [NPN]
- Axle bearing:

  plain [B]
  roller [R]
  ball [S]

SPECIAL COMPOUNDS
- Grey coloured non making tyre

					kg	SPN
200	50	20	60		75	WL-200-SPN.R20
260	85	20	75		200	WL-268-SPN.R20
406	110	20	85		250	WL-408-SPN.B20
	110	25	85		250	WL-408-SPN.B25
	110	20	85		250	WL-408-SPN.S20
	110	25	85		250	WL-408-SPN.S25

					kg	NPN
200	50	20	60		75	WL-200-NPN.R20
260	85	20	75		200	WL-268-NPN.B20
	85	20	75		200	WL-268-NPN.R20
406	110	20	85		250	WL-408-NPN.B20
	110	20	85		250	WL-408-NPN.R20

rodasa

SPN NPN

SERIJA SERIES

SPN

podrška support 1

strana.page.11

								Kg		
200	50	135x110	105x80	11	239	55		75	1-200-SPN.R-TS	1-200-SPN.R-TF
260	85	200x160	160x120	14	310	90		200	1-268-SPN.R-TS	1-268-SPN.R-TF

NPN

podrška support 1

strana.page.11

								Kg		
200	50	135x110	105x80	11	239	55		75	1-200-NPN.R-TS	1-200-NPN.R-TF
260	85	200x160	160x120	14	310	90		200	1-268-NPN.R-TS	1-268-NPN.R-TF

rodasa

PA

- Polipropilen
- Ležaj osovine:
  - biksna [B]
  - valjkasti [R]

- Polypropylene
- Axle bearing:
  - plain [B]
  - roller [R]

					kg	CODE
080	30	12	40		80	WL-080-P.B12
100	35	12	40		100	WL-100-P.B12
	35	12	40		120	WL-100-P.R12
125	40	15	46		130	WL-125-P.B15
	40	15	46		150	WL-125-P.R15
150	40	15	46		140	WL-150-P.B15
150 A	40	20	60		150	WL-150A-P.B20
200	50	20	60		205	WL-200-P.B20

PA

SERIJA
SERIES

podrška
support 1

strana.page.11

080	30	105x85	80x60	9	108	38	120		80	1-080-P.B-TS	1-080-P.B-TF	1-080-P.B-TSBK
100	35	105x85	80x60	9	128	38	120		100	1-100-P.B-TS	1-100-P.B-TF	1-100-P.B-TSBK
									120	1-100-P.R-TS	1-100-P.R-TF	1-100-P.R-TSBK
125	40	105x85	80x60	9	155	45	120		130	1-125-P.B-TS	1-125-P.B-TF	1-125-P.B-TSBK
									150	1-125-P.R-TS	1-125-P.R-TF	1-125-P.R-TSBK
150	40	105x85	80x60	9	183	45	120		140	1-150-P.B-TS	1-150-P.B-TF	1-150-P.B-TSBK
150 A	40	135x110	105x80	11	194	55	146		150	1-150A-P.B-TS	1-150A-P.B-TF	1-150A-P.B-TSBK
200	50	135x110	105x80	11	239	55	146		205	1-200-P.B-TS	1-200-P.B-TF	1-200-P.B-TSBK

rodasa

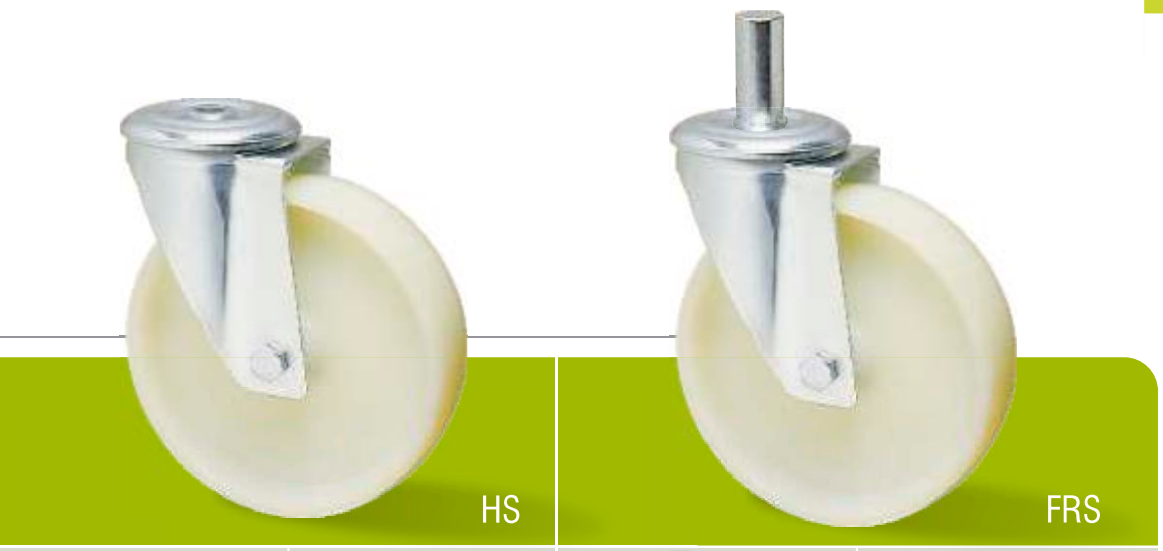

								kg				
080	30	12	20x50	104	38	120		80	1-080-P.B-HS	1-080-P.B-HSBK	1-080-P.B-FRS	1-080-P.B-FRSBK
100	35	12	22x50	124	38	120		100	1-100-P.B-HS	1-100-P.B-HSBK	1-100-P.B-FRS	1-100-P.B-FRSBK
								120	1-100-P.R-HS	1-100-P.R-HSBK	1-100-P.R-FRS	1-100-P.R-FRSBK
125	40	12	22x50	151	45	120		130	1-125-P.B-HS	1-125-P.B-HSBK	1-125-P.B-FRS	1-125-P.B-FRSBK
								150	1-125-P.R-HS	1-125-P.R-HSBK	1-125-P.R-FRS	1-125-P.R-FRSBK
150	40	12	22x50	179	45	120		140	1-150-P.B-HS	1-150-P.B-HSBK	1-150-P.B-FRS	1-150-P.B-FRSBK
150 A	40	16	27x60	188	55	146		150	1-150A-P.B-HS	1-150A-P.B-HSBK	1-150A-P.B-FRS	1-150A-P.B-FRSBK
200	50	16	27x60	233	55	146		205	1-200-P.B-HS	1-200-P.B-HSBK	1-200-P.B-FRS	1-200-P.B-FRSBK

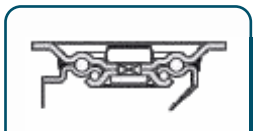

podrška
support 1

strana.page.11

podrška
support
X

strana.page.11

									Kg			
080	30	105x85	80x60	9	108	38	120	=	80	X-080-P.B-TS	X-080-P.B-TF	X-080-P.B-TSBK
100	35	105x85	80x60	9	128	38	120	=	100	X-100-P.B-TS	X-100-P.B-TF	X-100-P.B-TSBK
125	40	105x85	80x60	9	155	45	120	=	130	X-125-P.B-TS	X-125-P.B-TF	X-125-P.B-TSBK
150	40	105x85	80x60	9	183	45	120	=	140	X-150-P.B-TS	X-150-P.B-TF	X-150-P.B-TSBK
150 A	40	135x110	105x80	11	194	55	146	=	150	X-150A-P.B-TS	X-150A-P.B-TF	X-150A-P.B-TSBK
200	50	135x110	105x80	11	239	55	146	=	205	X-200-P.B-TS	X-200-P.B-TF	X-200-P.B-TSBK

SERIJA SERIES N

- Najlon 6
- Ležaj osovine:

biksna [B]
valjkasti [R]
inoks valjkasti [RX]
kuglični [S]

- NYLON 6
- Axle bearing:

plain [B]
roller [R]
inox roller [RX]
ball [S]

					kg	CODE
080	30	12	40		150	WL-080-N.B12
	30	12	40		150	WL-080-N.R12
	30	12	40		150	WL-080-N.RX12
100	35	12	40		200	WL-100-N.B12
	35	12	40		200	WL-100-N.R12
	35	12	40		200	WL-100-N.RX12
	35	12	40		450	WL-100-N.S12
100 X	35	12	40		500	WL-100X-N.B12
	35	12	40		350	WL-100X-N.S12
100 S	45	20	60		350	WL-100S-N.B20
	45	20	60		400	WL-100S-N.R20
	45	20	60		400	WL-100S-N.RX20
	45	20	61		300	WL-100S-N.S20
100 H	50	20	61		600	WL-100H-N.S20
125	40	15	46		300	WL-125-N.B15
	40	15	46		300	WL-125-N.R15
	40	15	46		300	WL-125-N.RX15
125 A	40	20	60		300	WL-125A-N.B20
125 S	45	20	60		500	WL-125S-N.B20
	45	20	60		500	WL-125S-N.R20
	45	20	60		500	WL-125S-N.RX20
	45	20	61		700	WL-125S-N.S20
125 H	50	20	61		900	WL-125H-N.S20

					Kg	CODE
150	40	15	46		400	WL-150-N.B15
	40	15	46		400	WL-150-N.R15
	40	15	46		400	WL-150-N.RX15
150 A	40	20	60		400	WL-150A-N.B20
150 S	50	20	60		700	WL-150S-N.B20
	50	20	60		500	WL-150S-N.R20
	50	20	60		500	WL-150S-N.RX20
	50	20	61		900	WL-150S-N.S20
175	50	20	60		600	WL-175-N.B20
	50	20	60		600	WL-175-N.R20
	50	20	60		600	WL-175-N.RX20
	50	20	61		700	WL-175-N.S20
200	50	20	60		600	WL-200-N.B20
200 S	50	20	60		1000	WL-200S-N.B20
	50	20	60		800	WL-200S-N.R20
	50	20	60		800	WL-200S-N.RX20
	50	20	61		1000	WL-200S-N.S20
	50	25	61		1000	WL-200S-N.S25
250	60	25	75		1200	WL-250-N.B25
	60	25	76		1200	WL-250-N.S25
250 S	58	25	75		1700	WL-250S-N.B25
	58	25	75		1700	WL-250S-N.S25
	25	30	75		1700	WL-250S-N.S30

rodasa

N SERIJA SERIES

TS

TF

TSBK

podrška support 1

strana.page.11

80	30	105x80	80x60	9	108	38	120		120	1-080-N.B-TS	1-080-N.B-TF	1-080-N.B-TSBK
									120	1-080-N.R-TS	1-080-N.R-TF	1-080-N.R-TSBK
100	35	105x85	80x60	9	128	38	120		120	1-100-N.B-TS	1-100-N.B-TF	1-100-N.B-TSBK
									120	1-100-N.R-TS	1-100-N.R-TF	1-100-N.R-TSBK
125	40	105x85	80x60	9	155	45	120		180	1-125-N.B-TS	1-125-N.B-TF	1-125-N.B-TSBK
									180	1-125-N.R-TS	1-125-N.R-TF	1-125-N.R-TSBK
125 A	40	135x110	105x80	11	164	55	146		300	1-125A-N.B-TS	1-125A-N.B-TF	1-125A-N.B-TSBK
125 S	45	135x110	105x80	11	164	55	146		300	1-125S-N.B-TS	1-125S-N.B-TF	1-125S-N.B-TSBK
									300	1-125S-N.R-TS	1-125S-N.R-TF	1-125S-N.R-TSBK
									300	1-125S-N.S-TS	1-125S-N.S-TF	1-125S-N.S-TSBK
150	40	105x80	80x60	9	183	45	120		180	1-150-N.B-TS	1-150-N.B-TF	1-150-N.B-TSBK
									180	1-150-N.R-TS	1-150-N.R-TF	1-150-N.R-TSBK
150 A	40	135x110	105x80	11	194	55	146		300	1-150A-N.B-TS	1-150A-N.B-TF	1-150A-N.B-TSBK
150 S	50	135x110	105x80	11	195	55	146		300	1-150S-N.B-TS	1-150S-N.B-TF	1-150S-N.B-TSBK
									300	1-150S-N.R-TS	1-150S-N.R-TF	1-150S-N.R-TSBK
									300	1-150S-N.S-TS	1-150S-N.S-TF	1-150S-N.S-TSBK
175	50	135x110	105x80	11	217	55	146		300	1-175-N.B-TS	1-175-N.B-TF	1-175-N.B-TSBK
									300	1-175-N.R-TS	1-175-N.R-TF	1-175-N.R-TSBK
									300	1-175-N.S-TS	1-175-N.S-TF	1-175-N.S-TSBK
200	50	135x110	105x80	11	239	55	146		300	1-200-N.B-TS	1-200-N.B-TF	1-200-N.B-TSBK
									300	1-200-N.R-TS	1-200-N.R-TF	1-200-N.R-TSBK
									300	1-200-N.S-TS	1-200-N.S-TF	1-200-N.S-TSBK
250	60	200x160	160x120	14	305	90	-		550	1-250-N.B-TS	1-250-N.B-TF	1-250-N.B-TSBK
									550	1-250-N.R-TS	1-250-N.R-TF	1-250-N.R-TSBK
									550	1-250-N.S-TS	1-250-N.S-TF	1-250-N.S-TSBK

rodasa

								kg				
080	30	12	20x50	104	38	120		120	1-080-N.B-HS	1-080-N.B-HSBK	1-080-N.B-FRS	1-080-N.B-FRSBK
								120	1-080-N.R-HS	1-080-N.R-HSBK	1-080-N.R-FRS	1-080-N.R-FRSBK
100	35	12	20x50	124	38	120		120	1-100-N.B-HS	1-100-N.B-HSBK	1-100-N.B-FRS	1-100-N.B-FRSBK
								120	1-100-N.R-HS	1-100-N.R-HSBK	1-100-N.R-FRS	1-100-N.R-FRSBK
125	40	12	22x50	151	45	120		180	1-125-N.B-HS	1-125-N.B-HSBK	1-125-N.B-FRS	1-125-N.B-FRSBK
								180	1-125-N.R-HS	1-125-N.R-HSBK	1-125-N.R-FRS	1-125-N.R-FRSBK
125 A	40	16	27x60	158	55	146		300	1-125A-N.S-HS	1-125A-N.S-HSBK	1-125A-N.S-FRS	1-125A-N.S-FRSBK
125 S	45	16	27x60	164	55	146		300	1-125S-N.B-HS	1-125S-N.B-HSBK	1-125S-N.B-FRS	1-125S-N.B-FRSBK
								300	1-125S-N.R-HS	1-125S-N.R-HSBK	1-125S-N.R-FRS	1-125S-N.R-FRSBK
								300	1-125S-N.S-HS	1-125S-N.S-HSBK	1-125S-N.S-FRS	1-125S-N.S-FRSBK
150	40	12	22x50	179	45	120		180	1-150-N.B-HS	1-150-N.B-HSBK	1-150-N.B-FRS	1-150-N.B-FRSBK
								180	1-150-N.R-HS	1-150-N.R-HSBK	1-150-N.R-FRS	1-150-N.R-FRSBK
150 A	40	16	27x60	188	55	146		300	1-150A-N.B-HS	1-150A-N.B-HSBK	1-150A-N.B-FRS	1-150A-N.B-FRSBK
150 S	50	16	27x60	188	55	146		300	1-150S-N.B-HS	1-150S-N.B-HSBK	1-150S-N.B-FRS	1-150S-N.B-FRSBK
								300	1-150S-N.R-HS	1-150S-N.R-HSBK	1-150S-N.R-FRS	1-150S-N.R-FRSBK
								300	1-150S-N.S-HS	1-150S-N.S-HSBK	1-150S-N.S-FRS	1-150S-N.S-FRSBK
175	50	16	27x60	211	55	146		300	1-175-N.B-HS	1-175-N.B-HSBK	1-175-N.B-FRS	1-175-N.B-FRSBK
								300	1-175-N.R-HS	1-175-N.R-HSBK	1-175-N.R-FRS	1-175-N.R-FRSBK
								300	1-175-N.S-HS	1-175-N.S-HSBK	1-175-N.S-FRS	1-175-N.S-FRSBK
200	50	16	27x60	233	55	146		300	1-200-N.B-HS	1-200-N.B-HSBK	1-200-N.B-FRS	1-200-N.B-FRSBK
								300	1-200-N.R-HS	1-200-N.R-HSBK	1-200-N.R-FRS	1-200-N.R-FRSBK
								300	1-200-N.S-HS	1-200-N.S-HSBK	1-200-N.S-FRS	1-200-N.S-FRSBK

podrška
support 1
strana.page.11

N SERIJA SERIES

080	30	105x80	80x60	9	108	38	120		120	X-080-N.B-TS	X-080-N.B-TF	X-080-N.B-TSBK
									120	X-080-N.RX-TS	X-080-N.RX-TF	X-080-N.RX-TSBK
100	35	105x85	80x60	9	128	38	120		120	X-100-N.B-TS	X-100-N.B-TF	X-100-N.B-TSBK
									120	X-100-N.RX-TS	X-100-N.RX-TF	X-100-N.RX-TSBK
125	40	105x85	80x60	9	155	45	120		180	X-125-N.B-TS	X-125-N.B-TF	X-125-N.B-TSBK
									180	X-125-N.RX-TS	X-125-N.RX-TF	X-125-N.RX-TSBK
125 A	40	135x110	105x80	11	164	55	146		300	X-125A-N.B-TS	X-125A-N.B-TF	X-125A-N.B-TSBK
125 S	45	135x110	105x80	11	164	55	146		300	X-125S-N.B-TS	X-125S-N.B-TF	X-125S-N.B-TSBK
									300	X-125S-N.RX-TS	X-125S-N.RX-TF	X-125S-N.RX-TSBK
150	40	105x80	80x60	9	183	45	120		180	X-150-N.B-TS	X-150-N.B-TF	X-150-N.B-TSBK
									180	X-150-N.RX-TS	X-150-N.RX-TF	X-150-N.RX-TSBK
150 A	40	135x110	105x80	11	194	55	146		300	X-150A-N.B-TS	X-150A-N.B-TF	X-150A-N.B-TSBK
150 S	50	135x110	105x80	11	194	55	146		300	X-150S-N.B-TS	X-150S-N.B-TF	X-150S-N.B-TSBK
									300	X-150S-N.RX-TS	X-150S-N.RX-TF	X-150S-N.RX-TSBK
175	50	135x110	105x80	11	217	55	146		300	X-175-N.B-TS	X-175-N.B-TF	X-175-N.B-TSBK
									300	X-175-N.RX-TS	X-175-N.RX-TF	X-175-N.RX-TSBK
200	50	135x110	105x80	11	239	55	146		300	X-200-N.B-TS	X-200-N.B-TF	X-200-N.B-TSBK
									300	X-200-N.RX-TS	X-200-N.RX-TF	X-200-N.RX-TSBK

100	32	105x85	80x60	8	128	28		250	E-100-N.B-TS	E-100-N.B-TF
	35	105x85	80x60	8	128	28		250	E-100-N.R-TS	E-100-N.R-TF
125	38	105x85	80x60	8	154	29		250	E-125-N.B-TS	E-125-N.B-TF
	40	105x85	80x60	8	154	29		250	E-125-N.R-TS	E-125-N.R-TF

rodasa

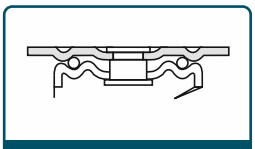

podrška
support 6

strana.page.11

								Kg		
63	23	95x70	76x44	8	78	21		85	6-063-N.B-TS	-
		95x59	76x35	8	78	-		85	-	6-063-N.B-TF
75	25	105x80	80x60	8	94	22		120	6-075-N.B-TS	-
		101x63	80x35	8	94	-		120	-	6-075-N.B-TF
100	32	128x102	105x80	10	125	25		225	6-100-N.B-TS	-
		120x80	100x48	10	125	-		225	-	6-100-N.B-TF
125	35	145x101	115x80	10	154	30		295	6-125-N.B-TS	-
		145x110	115x80	10	154	-		295	-	6-125-N.B-TF
150	40	162x132	140x105	10	182	42		360	6-150-N.B-TS	-
		171x108	130x67	10	182	-		360	-	6-150-N.B-TF

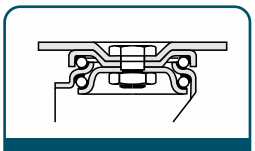

podrška
support 7

strana.page.11

									Kg			
080	30	105x80	80x60	9	112	39			150	7-080-N.B-TS	7-080-N.B-TF	-
									150	7-080-N.R-TS	7-080-N.R-TF	-
100	35	105x85	80x60	9	132	40	98		200	7-100-N.B-TS	7-100-N.B-TF	7-100-N.B-TSFP
									200	7-100-N.R-TS	7-100-N.R-TF	7-100-N.R-TSFP
125	40	105x85	80x60	9	160	40	104		300	7-125-N.B-TS	7-125-N.B-TF	7-125-N.B-TSFP
									300	7-125-N.R-TS	7-125-N.R-TF	7-125-N.R-TSFP
150 S	50	140x110	105x80	11	186	41	104		400	7-150S-N.S-TS	7-150S-N.S-TF	7-150S-N.S-TSFP
200 S	50	140x110	105x80	11	243	55	130		880	7-200S-N.S-TS	7-200S-N.S-TF	7-200S-N.S-TSFP
250	60	200x160	160x120	15	310	63	133		1200	7-250-N.S-TS	7-250-N.S-TF	7-250-N.S-TSFP

N SERIJA SERIES

TS

TF

TSFP

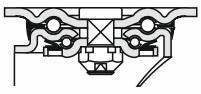

podrška support **H**

strana.page.11

100 S	45	135x110	105x80	11	148	55	110		350	H-100S-N.B-TS	H-100S-N.B-TF	H-100S-N.B-TSFP
									350	H-100S-N.R-TS	H-100S-N.R-TF	H-100S-N.R-TSFP
									350	H-100S-N.S-TS	H-100S-N.S-TF	H-100S-N.S-TSFP
100 H	50	135x110	105x80	11	148	55	110		600	H-100H-N.B-TS	H-100H-N.B-TF	H-100H-N.B-TSFP
125 S	45	135x110	105x80	11	175	55	110		500	H-125S-N.B-TS	H-125S-N.B-TF	H-125S-N.B-TSFP
									500	H-125S-N.R-TS	H-125S-N.R-TF	H-125S-N.R-TSFP
									700	H-125S-N.S-TS	H-125S-N.S-TF	H-125S-N.S-TSFP
150 S	50	135x110	105x80	11	200	58	110		700	H-150S-N.B-TS	H-150S-N.B-TF	H-150S-N.B-TSFP
									600	H-150S-N.R-TS	H-150S-N.R-TF	H-150S-N.R-TSFP
									900	H-150S-N.S-TS	H-150S-N.S-TF	H-150S-N.S-TSFP
175	50	135x110	105x80	11	238	65	110		600	H-175-N.B-TS	H-175-N.B-TF	H-175-N.B-TSFP
									600	H-175-N.R-TS	H-175-N.R-TF	H-175-N.R-TSFP
									700	H-175-N.S-TS	H-175-N.S-TF	H-175-N.S-TSFP
200 S	50	135x110	105x80	11	250	65	110		1000	H-200S-N.B-TS	H-200S-N.B-TF	H-200S-N.B-TSFP
									800	H-200S-N.R-TS	H-200S-N.R-TF	H-200S-N.R-TSFP
									1000	H-200S-N.S-TS	H-200S-N.S-TF	H-200S-N.S-TSFP
250	60	135x110	105x80	11	300	65	110		1000	H-250-N.B-TS	H-250-N.B-TF	H-250-N.B-TSFP
									1000	H-250-N.S-TS	H-250-N.S-TF	H-250-N.S-TSFP

TS

TF

TSFP

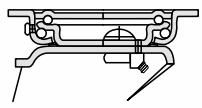

podrška support **LV**

strana.page.11

100 X	35	105x85	80x60	9	128	40	95		350	LV-100X-N.B-TS	LV-100X-N.B-TF	LV-100X-N.B-TSFP
									350	LV-100X-N.S-TS	LV-100X-N.S-TF	LV-100X-N.S-TSFP
125 S	45	135x110	105x80	11	178	50	140		500	LV-125S-N.S-TS	LV-125S-N.S-TF	LV-125S-N.S-TSFP
150 S	50	135x110	105x80	11	210	53	140		700	LV-150S-N.B-TS	LV-150S-N.B-TF	LV-150S-N.B-TSFP
									600	LV-150S-N.R-TS	LV-150S-N.R-TF	LV-150S-N.R-TSFP
									900	LV-150S-N.S-TS	LV-150S-N.S-TF	LV-150S-N.S-TSFP
200 S	50	135x110	105x80	11	245	65	140		1000	LV-200S-N.B-TS	LV-200S-N.B-TF	LV-200S-N.B-TSFP
									800	LV-200S-N.R-TS	LV-200S-N.R-TF	LV-200S-N.R-TSFP
									1000	LV-200S-N.S-TS	LV-200S-N.S-TF	LV-200S-N.S-TSFP
250	60	135x110	105x80	11	297	67	140		1000	LV-250-N.B-TS	LV-250-N.B-TF	LV-250-N.B-TSFP
									1000	LV-250-N.S-TS	LV-250-N.S-TF	LV-250-N.S-TSFP

roda s a

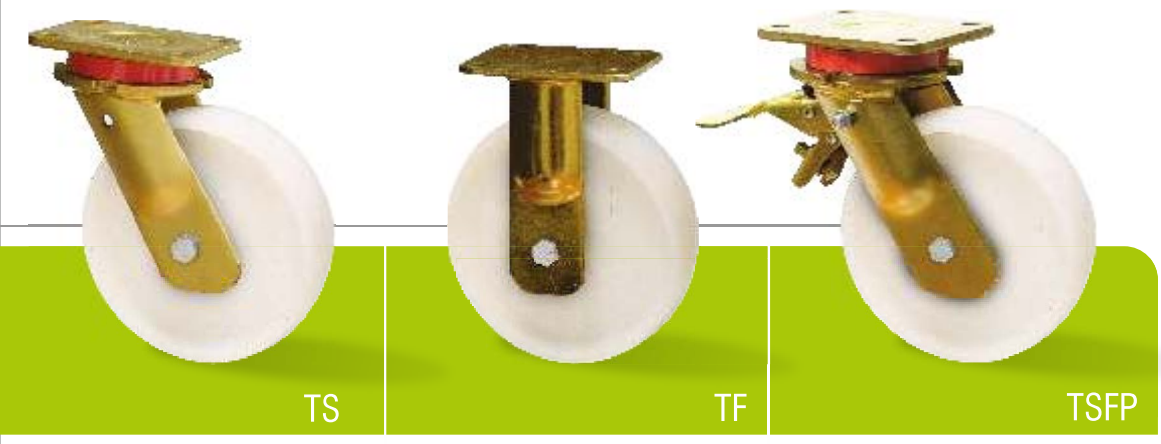

strana.page.11

									Kg			
100 X	35	135x110	105x80	11	148	42	110		500	LLAK-100X-N.B-TS	LLAK-100X-N.B-TF	LLAK-100X-N.B-TSFP
									500	LLAK-100X-N.S-TS	LLAK-100X-N.S-TF	LLAK-100X-N.S-TSFP
125 S	45	135x110	105x80	11	170	50	130		500	LLAK-125S-N.B-TS	LLAK-125S-N.B-TF	LLAK-125S-N.B-TSFP
									500	LLAK-125S-N.R-TS	LLAK-125S-N.R-TF	LLAK-125S-N.R-TSFP
									700	LLAK-125S-N.S-TS	LLAK-125S-N.S-TF	LLAK-125S-N.S-TSFP
150 S	50	135x110	105x80	11	200	57	130		700	LLAK-150S-N.B-TS	LLAK-150S-N.B-TF	LLAK-150S-N.B-TSFP
									600	LLAK-150S-N.R-TS	LLAK-150S-N.R-TF	LLAK-150S-N.R-TSFP
									900	LLAK-150S-N.S-TS	LLAK-150S-N.S-TF	LLAK-150S-N.S-TSFP
200 S	50	135x110	105x80	11	245	65	130		1000	LLAK-200S-N.B-TS	LLAK-200S-N.B-TF	LLAK-200S-N.B-TSFP
									800	LLAK-200S-N.R-TS	LLAK-200S-N.R-TF	LLAK-200S-N.R-TSFP
									1000	LLAK-200S-N.S-TS	LLAK-200S-N.S-TF	LLAK-200S-N.S-TSFP
250	60	135x110	105x80	11	305	80	135		1200	LLAK-250-N.B-TS	LLAK-250-N.B-TF	LLAK-250-N.B-TSFP
									1200	LLAK-250-N.S-TS	LLAK-250-N.S-TF	LLAK-250-N.S-TSFP
250 S	58	135x110	105x80	11	305	80	135		1700	LLAK-250S-N.B-TS	LLAK-250S-N.B-TF	LLAK-250S-N.B-TSFP
									1700	LLAK-250S-N.S-TS	LLAK-250S-N.S-TF	LLAK-250S-N.S-TSFP

strana.page.11

									Kg			
100 X	35	135x110	105x80	9	145	41	110		450	LR-100X-N.B-TS	LR-100X-N.B-TF	LR-100X-N.B-TSFP
									500	LR-100X-N.S-TS	LR-100X-N.S-TF	LR-100X-N.S-TSFP
125 S	45	135x110	105x80	11	170	50	130		500	LR-125S-N.B-TS	LR-125S-N.B-TF	LR-125S-N.B-TSFP
									500	LR-125S-N.R-TS	LR-125S-N.R-TF	LR-125S-N.R-TSFP
									700	LR-125S-N.S-TS	LR-125S-N.S-TF	LR-125S-N.S-TSFP
150 S	50	135x110	105x80	11	200	55	130		700	LR-150S-N.B-TS	LR-150S-N.B-TF	LR-150S-N.B-TSFP
									600	LR-150S-N.R-TS	LR-150S-N.R-TF	LR-150S-N.R-TSFP
									900	LR-150S-N.S-TS	LR-150S-N.S-TF	LR-150S-N.S-TSFP
200 S	50	135x110	105x80	11	245	60	130		1000	LR-200S-N.B-TS	LR-200S-N.B-TF	LR-200S-N.B-TSFP
									800	LR-200S-N.R-TS	LR-200S-N.R-TF	LR-200S-N.R-TSFP
									1000	LR-200S-N.S-TS	LR-200S-N.S-TF	LR-200S-N.S-TSFP
250	60	200x160	160x120	15	310	72	135		1200	LR-250-N.B-TS	LR-250-N.B-TF	LR-250-N.B-TSFP
									1200	LR-250-N.S-TS	LR-250-N.S-TF	LR-250-N.S-TSFP
250 S	58	200x160	160x120	15	310	72	135		1700	LR-250S-N.B-TS	LR-250S-N.B-TF	LR-250S-N.B-TSFP
									1700	LR-250S-N.S-TS	LR-250S-N.S-TF	LR-250S-N.S-TSFP

ZABELEŠKE | NOTES

SERIJA SERIES NF

- Pojacani NAJLON 6 + FIBER GLASS
- Ležaj osovine

biksna [B]
kuglični ležaj [S]
Inoks kuglični ležaj [SX]

- Reinforced NYLON 6 + FIBER GLASS
- Axle bearing:

plain [B]
ball bearing [S]
inox ball bearing [SX]

					kg	CODE
080	30	12	41		200	WL-080-NF.S12
	30	12	40		200	WL-080-NF.B12
100	30	12	41		250	WL-100-NF.S12
	35	12	40		250	WL-100-NF.B12
125	30	15	47		350	WL-125-NF.S15
	40	15	46		350	WL-125-NF.B15
150	35	15	47		450	WL-150-NF.S15
	40	15	46		450	WL-150-NF.B15
200	50	20	61		1000	WL-200-NF.S20
	50	20	60		1000	WL-200-NF.B20

rodasa

NF SERIJA SERIES

	80	100	125	160	200
	12mm	12mm	12mm	16mm	16mm

	80	100	125	160	200
	20x50	20x50	22x50	27x60	27x60

podrška support 1

strana.page.11

080	30	105x80	80x60	9	108	38	120		120	1-080-NF.S-TS	1-080-NF.S-TF	1-080-NF.S-TSBK
	30								120	1-080-NF.B-TS	1-080-NF.B-TF	1-080-NF.B-TSBK
100	30	105x85	80x60	9	128	38	120		120	1-100-NF.S-TS	1-100-NF.S-TF	1-100-NF.S-TSBK
	35								120	1-100-NF.B-TS	1-100-NF.B-TF	1-100-NF.B-TSBK
125	30	105x85	80x60	9	155	45	120		180	1-125-NF.S-TS	1-125-NF.S-TF	1-125-NF.S-TSBK
	40								180	1-125-NF.B-TS	1-125-NF.B-TF	1-125-NF.B-TSBK
150	35	105x80	80x60	9	183	45	120		180	1-150-NF.S-TS	1-150-NF.S-TF	1-150-NF.S-TSBK
	40								180	1-150-NF.B-TS	1-150-NF.B-TF	1-150-NF.B-TSBK
200	50	135x110	105x80	11	239	55	146		300	1-200-NF.S-TS	1-200-NF.S-TF	1-200-NF.S-TSBK
	50								300	1-200-NF.B-TS	1-200-NF.B-TF	1-200-NF.B-TSBK

Za svaki različiti tip fitinga, zamenite -TS od relativne šifre sa gornjom pločom, sa specifičnim opisom (-HS za rupu za vijke, -FRS za stub)

Primer: 1-100-NF.S-**TS** sa gornjom pločom
1-100-NF.S-**HS** s otvorom za vijak
1-100-NF.S-**FRS** sa stablom

Za kočnicu, dodajte BK na kraju relativnog koda

Primer: 1-100-NF.S-**HS** sa rupom za vijke
1-100-NF.S-**HSBK** sa otvorom za vijke i kočnicom

For each different type of fitting, substitute –TS from the relative code with top plate, with the specific description (-HS for bolt hole -FRS for stem)

Example: 1-100-NF.S-**TS** with top plate
1-100-NF.S-**HS** with bolt hole
1-100-NF.S-**FRS** with stem

For brake, add –BK at the end of the relative code

Example: 1-100-NF.S-**HS** with bolt hole
1-100-NF.S-**HSBK** with bolt hole and brake

roda s a

080	30	105x80	80x60	9	108	38	120		120	X-080-NF.SX-TS	X-080-NF.SX-TF	X-080-NF.SX-TSBK
	30								120	X-080-NF.B-TS	X-080-NF.B-TF	X-080-NF.B-TSBK
100	30	105x85	80x60	9	128	38	120		120	X-100-NF.SX-TS	X-100-NF.SX-TF	X-100-NF.SX-TSBK
	35								120	X-100-NF.B-TS	X-100-NF.B-TF	X-100-NF.B-TSBK
125	30	105x85	80x60	9	155	45	120		180	X-125-NF.SX-TS	X-125-NF.SX-TF	X-125-NF.SX-TSBK
	40								180	X-125-NF.B-TS	X-125-NF.B-TF	X-125-NF.B-TSBK
150	35	105x80	80x60	9	183	45	120		180	X-150-NF.SX-TS	X-150-NF.SX-TF	X-150-NF.SX-TSBK
	40								180	X-150-NF.B-TS	X-150-NF.B-TF	X-150-NF.B-TSBK
200	50	135x110	105x80	11	239	55	146		300	X-200-NF.SX-TS	X-200-NF.SX-TF	X-200-NF.SX-TSBK
	50								300	X-200-NF.B-TS	X-200-NF.B-TF	X-200-NF.B-TSBK

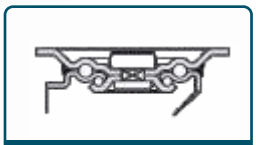

podrška
support
X

strana.page.11

080	30	105x85	80x60	9	112	39	-		180	7-080-NF.S-TS	7-080-NF.S-TF	-
	30								180	7-080-NF.B-TS	7-080-NF.B-TF	-
100	30	105x85	80x60	9	132	40	98		200	7-100-NF.S-TS	7-100-NF.S-TF	7-100-NF.S-TSFP
	35								200	7-100-NF.B-TS	7-100-NF.B-TF	7-100-NF.B-TSFP
125	30	105x85	80x60	9	160	40	104		300	7-125-NF.S-TS	7-125-NF.S-TF	7-125-NF.S-TSFP
	40								300	7-125-NF.B-TS	7-125-NF.B-TF	7-125-NF.B-TSFP
200	50	140x110	105x80	11	243	55	130		880	7-200-NF.S-TS	7-200-NF.S-TF	7-200-NF.S-TSFP

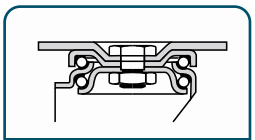

podrška
support
7

strana.page.11

ZABELEŠKE | NOTES

FN

- Thermoset smola
- Ležaj osovine

biksna [B]
kuglični [S]

- Thermoset resin
- Axle bearing:

plain [B]
ball [S]

						CODE
080	35	12	40		150	WL-080-FN.B12
	35	12	40		180	WL-080-FN.S12
100	35	12	40		170	WL-100-FN.B12
	35	12	40		200	WL-100-FN.S12
125	40	15	45		250	WL-125-FN.B15
125S	40	20	48		250	WL-125S-FN.B20
150	45	20	58		300	WL-150-FN.B20
160	50	20	58		340	WL-160-FN.B20
200	50	20	58		370	WL-200-FN.B20

FN

SERIJA
SERIES

+280
-40
°C

	80	100	125	125 S	150	160	200
	12mm	12mm	12mm	16mm	16mm	16mm	16mm

	80	100	125	125 S	150	160	200
	20x50	20x50	22x50	27x60	27x60	27x60	27x60

podrška
support 1

strana.page.11

									kg			
080	35	105x85	80x60	9	108	38	120		120	1-080-FN.B-TS	1-080-FN.B-TF	1-080-FN.B-TSBK
									120	1-080-FN.S-TS	1-080-FN.S-TF	1-080-FN.S-TSBK
100	35	105x85	80x60	9	128	38	120		120	1-100-FN.B-TS	1-100-FN.B-TF	1-100-FN.B-TSBK
									120	1-100-FN.S-TS	1-100-FN.S-TF	1-100-FN.S-TSBK
125	40	105x85	80x60	9	155	45	120		180	1-125-FN.B-TS	1-125-FN.B-TF	1-125-FN.B-TSBK
125S	40	135x110	105x80	11	164	55	146		250	1-125S-FN.B-TS	1-125S-FN.B-TF	1-125S-FN.B-TSBK
150	45	135x110	105x80	11	194	55	-		300	1-150-FN.B-TS	1-150-FN.B-TF	-
160	50	135x110	105x80	11	199	55	146		300	1-160-FN.B-TS	1-160-FN.B-TF	1-160-FN.B-TSBK
200	50	135x110	105x80	11	239	55	146		300	1-200-FN.B-TS	1-200-FN.B-TF	1-200-FN.B-TSBK

Za svaki različiti tip fitinga, zamenite -TS od relativne šifre sa gornjom pločom, sa specifičnim opisom (-HS za rupu za vijke, -FRS za stub)

Primer: 1-100-FN.B-**TS** sa gornjom pločom
1-100-FN.B-**HS** s otvorom za vijak
1-100-FN.B-**FRS** sa stablom

Za kočnicu, dodajte BK na kraju relativnog koda

Primer: 1-100-FN.B-**HS** sa rupom za vijke
1-100-FN.B-**HSBK** sa otvorom za vijke i kočnicom

For each different type of fitting, substitute –TS from the relative code with top plate, with the specific description (-HS for bolt hole -FRS for stem)

Example: 1-100-FN.B-**TS** with top plate
1-100-FN.B-**HS** with bolt hole
1-100-FN.B-**FRS** with stem

For brake, add –BK at the end of the relative code

Example: 1-100-FN.B-**HS** with bolt hole
1-100-FN.B-**HSBK** with bolt hole and brake

roda s a

FN

+280
-40
°C

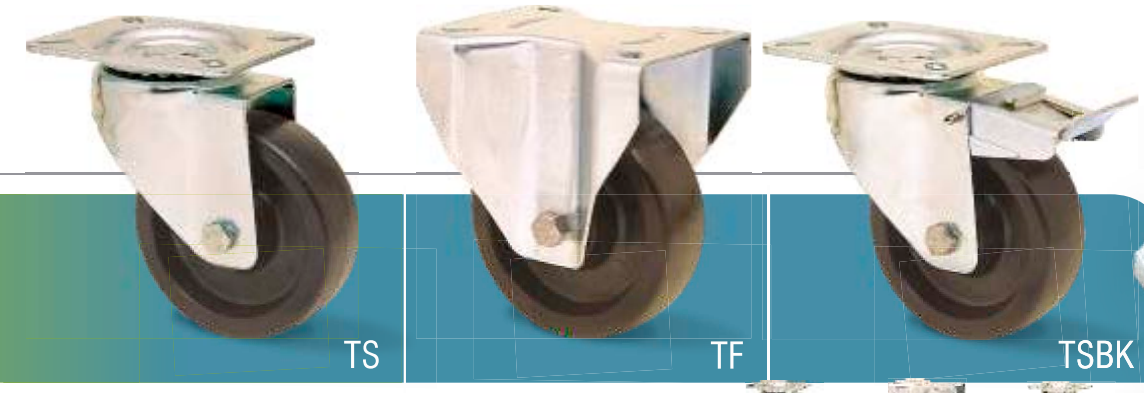

080	35	105x85	80x60	9	108	38	120	=	120	X-080-FN.B-TS	X-080-FN.B-TF	X-080-FN.B-TSBK
100	35	105x85	80x60	9	128	38	120	=	120	X-100-FN.B-TS	X-100-FN.B-TF	X-100-FN.B-TSBK
125	40	105x85	80x60	9	155	45	120	=	180	X-125-FN.B-TS	X-125-FN.B-TF	X-125-FN.B-TSBK
125S	40	135x110	105x80	11	164	55	146	=	250	X-125S-FN.B-TS	X-125S-FN.B-TF	X-125S-FN.B-TSBK
150	45	135x110	105x80	11	194	55	-	=	300	X-150-FN.B-TS	X-150-FN.B-TF	-
160	50	135x110	105x80	11	199	55	146	=	300	X-160-FN.B-TS	X-160-FN.B-TF	X-160-FN.B-TSBK
200	50	135x110	105x80	11	239	55	146	=	300	X-200-FN.B-TS	X-200-FN.B-TF	X-200-FN.B-TSBK

podrška
support
X

strana.page.11

ZABELEŠKE | NOTES

SERIJA / SERIES ND

- Brizgani poliuretan
- Najlon 6 centar
- Ležaj osovine

biksna [B]
valjkasti [R]
inoks valjkasti [RX]
kuglični [S]

- Polyurethane injected
- NYLON 6 center
- Axle bearing:

plain [B]
roller [R]
inox roller [RX]
ball [S]

					kg	CODE
080	30	12	40		125	WL-080-ND.B12
	30	12	40		125	WL-080-ND.R12
	30	12	40		125	WL-080-ND.RX12
	30	12	41		125	WL-080-ND.S12
100	30	12	40		125	WL-100-ND.B12
	30	12	40		150	WL-100-ND.R12
	30	12	40		150	WL-100-ND.RX12
	30	12	41		150	WL-100-ND.S12
100S	40	15	46		175	WL-100S-ND.R15
	40	15	46		175	WL-100S-ND.RX15
	40	15	47		175	WL-100S-ND.S15
125	30	15	46		200	WL-125-ND.B15
	30	15	46		200	WL-125-ND.R15
	30	15	46		200	WL-125-ND.RX15
	30	15	47		200	WL-125-ND.S15
125S	40	20	60		250	WL-125S-ND.B20
	40	20	60		250	WL-125S-ND.R20
	40	20	60		250	WL-125S-ND.RX20
	40	20	61		250	WL-125S-ND.S20

					kg	CODE
150	35	15	46		225	WL-150-ND.B15
	35	15	46		225	WL-150-ND.R15
	35	15	46		225	WL-150-ND.RX15
	35	15	47		225	WL-150-ND.S15
150S	45	20	60		350	WL-150S-ND.B20
	45	20	60		350	WL-150S-ND.R20
	45	20	60		350	WL-150S-ND.RX20
	45	20	61		350	WL-150S-ND.S20
175	45	20	60		400	WL-175-ND.B20
	45	20	60		400	WL-175-ND.R20
	45	20	61		400	WL-175-ND.S20
200	50	20	60		550	WL-200-ND.B20
	50	20	60		550	WL-200-ND.R20
	50	20	60		550	WL-200-ND.RX20
	50	20	61		550	WL-200-ND.S20
	50	25	61		550	WL-200-ND.S25
250	60	25	75		800	WL-250-ND.B25
	60	25	76		800	WL-250-ND.S25

rodasa

ND SERIJA SERIES

podrška support 1

strana.page.11

080	30	105x85	80x60	9	108	38	120		120	1-080-ND.B-TS	1-080-ND.B-TF	1-080-ND.B-TSBK
									120	1-080-ND.R-TS	1-080-ND.R-TF	1-080-ND.R-TSBK
									120	1-080-ND.S-TS	1-080-ND.S-TF	1-080-ND.S-TSBK
100	30	105x85	80x60	9	128	38	120		120	1-100-ND.B-TS	1-100-ND.B-TF	1-100-ND.B-TSBK
									120	1-100-ND.R-TS	1-100-ND.R-TF	1-100-ND.R-TSBK
									120	1-100-ND.S-TS	1-100-ND.S-TF	1-100-ND.S-TSBK
125	30	105x85	80x60	9	155	45	120		180	1-125-ND.B-TS	1-125-ND.B-TF	1-125-ND.B-TSBK
									180	1-125-ND.R-TS	1-125-ND.R-TF	1-125-ND.R-TSBK
									180	1-125-ND.S-TS	1-125-ND.S-TF	1-125-ND.S-TSBK
125S	40	135x110	105x80	11	164	55	146		250	1-125S-ND.B-TS	1-125S-ND.B-TF	1-125S-ND.B-TSBK
									250	1-125S-ND.R-TS	1-125S-ND.R-TF	1-125S-ND.R-TSBK
									250	1-125S-ND.S-TS	1-125S-ND.S-TF	1-125S-ND.S-TSBK
150	35	105x85	80x60	9	183	45	120		180	1-150-ND.B-TS	1-150-ND.B-TF	1-150-ND.B-TSBK
									180	1-150-ND.R-TS	1-150-ND.R-TF	1-150-ND.R-TSBK
									180	1-150-ND.S-TS	1-150-ND.S-TF	1-150-ND.S-TSBK
150S	45	135x110	105x80	11	194	55	146		300	1-150S-ND.B-TS	1-150S-ND.B-TF	1-150S-ND.B-TSBK
									300	1-150S-ND.R-TS	1-150S-ND.R-TF	1-150S-ND.R-TSBK
									300	1-150S-ND.S-TS	1-150S-ND.S-TF	1-150S-ND.S-TSBK
175	45	135x110	105x80	11	217	55	146		300	1-175-ND.B-TS	1-175-ND.B-TF	1-175-ND.B-TSBK
									300	1-175-ND.R-TS	1-175-ND.R-TF	1-175-ND.R-TSBK
									300	1-175-ND.S-TS	1-175-ND.S-TF	1-175-ND.S-TSBK
200	50	135x110	105x80	11	239	55	146		300	1-200-ND.B-TS	1-200-ND.B-TF	1-200-ND.B-TSBK
									300	1-200-ND.R-TS	1-200-ND.R-TF	1-200-ND.R-TSBK
									300	1-200-ND.S-TS	1-200-ND.S-TF	1-200-ND.S-TSBK

rodasa

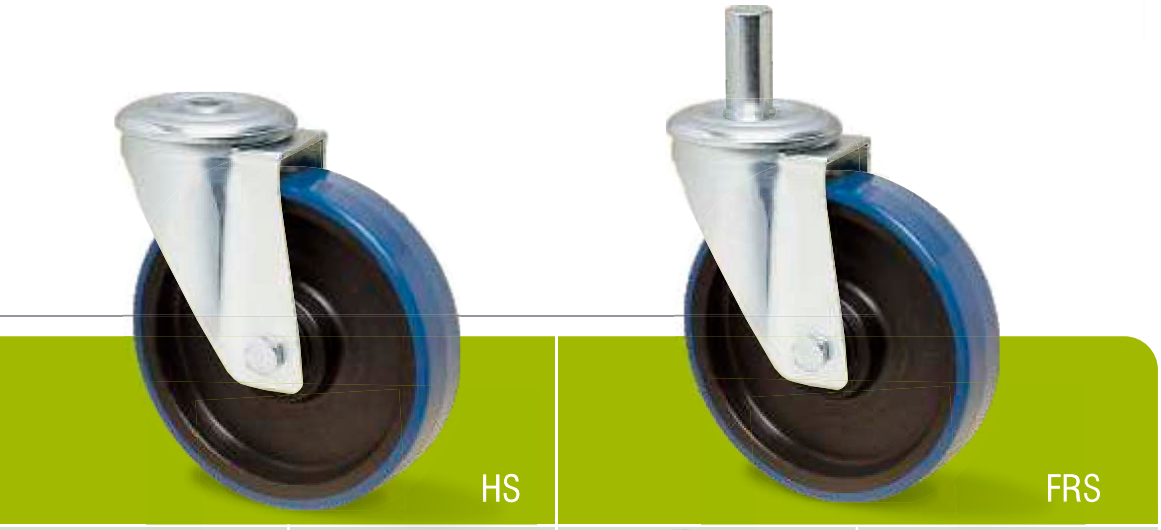

								kg				
080	30	12	20x50	108	38	120		120	1-080-ND.B-HS	1-080-ND.B-HSBK	1-080-ND.B-FRS	1-080-ND.B-FRSBK
								120	1-080-ND.R-HS	1-080-ND.R-HSBK	1-080-ND.R-FRS	1-080-ND.R-FRSBK
								120	1-080-ND.S-HS	1-080-ND.S-HSBK	1-080-ND.S-FRS	1-080-ND.S-FRSBK
100	30	12	20x50	128	38	120		120	1-100-ND.B-HS	1-100-ND.B-HSBK	1-100-ND.B-FRS	1-100-ND.B-FRSBK
								120	1-100-ND.R-HS	1-100-ND.R-HSBK	1-100-ND.R-FRS	1-100-ND.R-FRSBK
								120	1-100-ND.S-HS	1-100-ND.S-HSBK	1-100-ND.S-FRS	1-100-ND.S-FRSBK
125	30	12	22x50	155	45	120		180	1-125-ND.B-HS	1-125-ND.B-HSBK	1-125-ND.B-FRS	1-125-ND.B-FRSBK
								180	1-125-ND.R-HS	1-125-ND.R-HSBK	1-125-ND.R-FRS	1-125-ND.R-FRSBK
								180	1-125-ND.S-HS	1-125-ND.S-HSBK	1-125-ND.S-FRS	1-125-ND.S-FRSBK
125S	40	16	27x60	164	55	146		250	1-125S-ND.B-HS	1-125S-ND.B-HSBK	1-125S-ND.B-FRS	1-125S-ND.B-FRSBK
								250	1-125S-ND.R-HS	1-125S-ND.R-HSBK	1-125S-ND.R-FRS	1-125S-ND.R-FRSBK
								250	1-125S-ND.S-HS	1-125S-ND.S-HSBK	1-125S-ND.S-FRS	1-125S-ND.S-FRSBK
150	35	12	22x50	183	45	120		180	1-150-ND.B-HS	1-150-ND.B-HSBK	1-150-ND.B-FRS	1-150-ND.B-FRSBK
								180	1-150-ND.R-HS	1-150-ND.R-HSBK	1-150-ND.R-FRS	1-150-ND.R-FRSBK
								180	1-150-ND.S-HS	1-150-ND.S-HSBK	1-150-ND.S-FRS	1-150-ND.S-FRSBK
150S	45	16	27x60	194	55	146		300	1-150S-ND.B-HS	1-150S-ND.B-HSBK	1-150S-ND.B-FRS	1-150S-ND.B-FRSBK
								300	1-150S-ND.R-HS	1-150S-ND.R-HSBK	1-150S-ND.R-FRS	1-150S-ND.R-FRSBK
								300	1-150S-ND.S-HS	1-150S-ND.S-HSBK	1-150S-ND.S-FRS	1-150S-ND.S-FRSBK
175	45	16	27x60	217	55	146		300	1-175-ND.B-HS	1-175-ND.B-HSBK	1-175-ND.B-FRS	1-175-ND.B-FRSBK
								300	1-175-ND.R-HS	1-175-ND.R-HSBK	1-175-ND.R-FRS	1-175-ND.R-FRSBK
								300	1-175-ND.S-HS	1-175-ND.S-HSBK	1-175-ND.S-FRS	1-175-ND.S-FRSBK
200	50	16	27x60	239	55	146		300	1-200-ND.B-HS	1-200-ND.B-HSBK	1-200-ND.B-FRS	1-200-ND.B-FRSBK
								300	1-200-ND.R-HS	1-200-ND.R-HSBK	1-200-ND.R-FRS	1-200-ND.R-FRSBK
								300	1-200-ND.S-HS	1-200-ND.S-HSBK	1-200-ND.S-FRS	1-200-ND.S-FRSBK

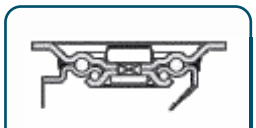

podrška
support 1

strana.page.11

roda s a

ND SERIJA SERIES

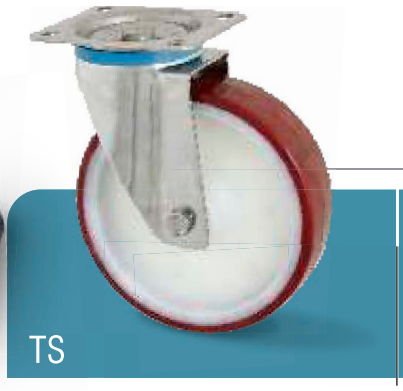

podrška support **X**

strana.page.11

									Kg			
080	30	105x85	80x60	9	108	38	120		120	X-080-ND.B-TS	X-080-ND.B-TF	X-080-ND.B-TSBK
								X	120	X-080-ND.RX-TS	X-080-ND.RX-TF	X-080-ND.RX-TSBK
100	30	105x85	80x60	9	128	38	120		120	X-100-ND.B-TS	X-100-ND.B-TF	X-100-ND.B-TSBK
								X	120	X-100-ND.RX-TS	X-100-ND.RX-TF	X-100-ND.RX-TSBK
125	30	105x85	80x60	9	155	45	120		180	X-125-ND.B-TS	X-125-ND.B-TF	X-125-ND.B-TSBK
								X	180	X-125-ND.RX-TS	X-125-ND.RX-TF	X-125-ND.RX-TSBK
125S	40	135x110	105x80	11	164	55	146		250	X-125S-ND.B-TS	X-125S-ND.B-TF	X-125S-ND.B-TSBK
								X	250	X-125S-ND.RX-TS	X-125S-ND.RX-TF	X-125S-ND.RX-TSBK
150	35	105x85	80x60	9	183	45	120		180	X-150-ND.B-TS	X-150-ND.B-TF	X-150-ND.B-TSBK
								X	180	X-150-ND.RX-TS	X-150-ND.RX-TF	X-150-ND.RX-TSBK
150S	45	135x110	105x80	11	194	55	146		300	X-150S-ND.B-TS	X-150S-ND.B-TF	X-150S-ND.B-TSBK
								X	300	X-150S-ND.RX-TS	X-150S-ND.RX-TF	X-150S-ND.RX-TSBK
200	50	135x110	105x80	11	239	55	146		300	X-200-ND.B-TS	X-200-ND.B-TF	X-200-ND.B-TSBK
								X	300	X-200-ND.RX-TS	X-200-ND.RX-TF	X-200-ND.RX-TSBK

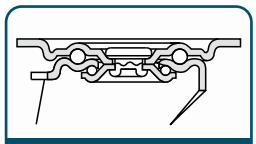

podrška support **E**

strana.page.11

								Kg		
100S	40	105x85	80x60	8	128	28		175	E-100S-ND.R-TS	E-100S-ND.R-TF
								175	E-100S-ND.S-TS	E-100S-ND.S-TF
125	30	105x85	80x60	8	154	29		200	E-125-ND.B-TS	E-125-ND.B-TF
								200	E-125-ND.R-TS	E-125-ND.R-TF
								200	E-125-ND.S-TS	E-125-ND.S-TF

rodasa

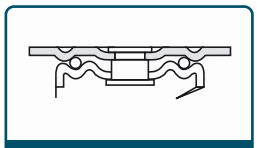

podrška
support 6

strana.page.11

								Kg		
100S	40	128x102	105x80	10	125	25		175	6-100S-ND.R-TS	-
		120x80	100x48			-		175	-	6-100S-ND.R-TF
		128x102	105x80	10	125	25		175	6-100S-ND.S-TS	-
		120x80	100x48			-		175	-	6-100S-ND.S-TF
125	35	145x101	115x80	10	154	30		295	6-125-ND.B-TS	-
		145x110	115x80			-		295	-	6-125-ND.B-TF
		145x101	115x80	10	154	30		295	6-125-ND.R-TS	-
		145x110	115x80			-		295	-	6-125-ND.R-TF
		145x101	115x80	10	154	30		295	6-125-ND.S-TS	-
		145x110	115x80			-		295	-	6-125-ND.S-TF
150S	45	162x132	140x105	10	182	42		350	6-150S-ND.B-TS	-
		171x108	130x67			-		350	-	6-150S-ND.B-TF
		162x132	140x105	10	182	42		350	6-150S-ND.R-TS	-
		171x108	130x67			-		350	-	6-150S-ND.R-TF
		162x132	140x105	10	182	42		350	6-150S-ND.S-TS	-
		171x108	130x67			-		350	-	6-150S-ND.S-TF

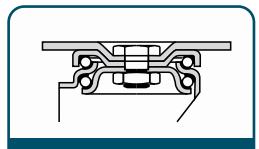

podrška
support 7

strana.page.11

									Kg			
080	30	105x80	80x60	9	112	39	-		125	7-080-ND.B-TS	7-080-ND.B-TF	-
									125	7-080-ND.R-TS	7-080-ND.R-TF	-
									125	7-080-ND.S-TS	7-080-ND.S-TF	-
100	30	105x85	80x60	9	132	40	98		150	7-100-ND.B-TS	7-100-ND.B-TF	7-100-ND.B-TSFP
									150	7-100-ND.R-TS	7-100-ND.R-TF	7-100-ND.R-TSFP
									150	7-100-ND.S-TS	7-100-ND.S-TF	7-100-ND.S-TSFP
125	30	105x85	80x60	9	160	40	104		200	7-125-ND.B-TS	7-125-ND.B-TF	7-125-ND.B-TSFP
									200	7-125-ND.R-TS	7-125-ND.R-TF	7-125-ND.R-TSFP
									200	7-125-ND.S-TS	7-125-ND.S-TF	7-125-ND.S-TSFP
150 S	45	140x110	105x80	11	186	41	104		350	7-150S-ND.S-TS	7-150S-ND.S-TF	7-150S-ND.S-TSFP
175	45	140x110	105x80	11	214	53	130		400	7-175-ND.S-TS	7-175-ND.S-TF	7-175-ND.S-TSFP
200 S	50	140x110	105x80	11	243	55	130		550	7-200S-ND.B-TS	7-200S-ND.B-TF	7-200S-ND.B-TSFP
									550	7-200S-ND.R-TS	7-200S-ND.R-TF	7-200S-ND.R-TSFP
									550	7-200S-ND.S-TS	7-200S-ND.S-TF	7-200S-ND.S-TSFP

ND SERIJA SERIES

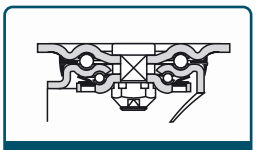

podrška support **H**

strana.page.11

125S	40	135x110	105x80	11	175	55	110		250	H-125S-ND.B-TS	H-125S-ND.B-TF	H-125S-ND.B-TSFP
									250	H-125S-ND.R-TS	H-125S-ND.R-TF	H-125S-ND.R-TSFP
									250	H-125S-ND.S-TS	H-125S-ND.S-TF	H-125S-ND.S-TSFP
150S	45	135x110	105x80	11	200	58	110		350	H-150S-ND.B-TS	H-150S-ND.B-TF	H-150S-ND.B-TSFP
									350	H-150S-ND.R-TS	H-150S-ND.R-TF	H-150S-ND.R-TSFP
									350	H-150S-ND.S-TS	H-150S-ND.S-TF	H-150S-ND.S-TSFP
175	45	135x110	105x80	11	238	65	110		400	H-175-ND.B-TS	H-175-ND.B-TF	H-175-ND.B-TSFP
									400	H-175-ND.R-TS	H-175-ND.R-TF	H-175-ND.R-TSFP
									400	H-175-ND.S-TS	H-175-ND.S-TF	H-175-ND.S-TSFP
200	50	135x110	105x80	11	250	65	110		550	H-200-ND.B-TS	H-200-ND.B-TF	H-200-ND.B-TSFP
									550	H-200-ND.R-TS	H-200-ND.R-TF	H-200-ND.R-TSFP
									550	H-200-ND.S-TS	H-200-ND.S-TF	H-200-ND.S-TSFP
250	60	135x110	105x80	11	300	65	110		800	H-250-ND.B-TS	H-250-ND.B-TF	H-250-ND.B-TSFP
									800	H-250-ND.S-TS	H-250-ND.S-TF	H-250-ND.S-TSFP

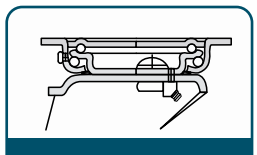

podrška support **LV**

strana.page.11

080	30	105x85	80x60	9	118	40	95		125	LV-080-ND.S-TS	LV-080-ND.S-TF	LV-080-ND.S-TSFP
100S	40	105x85	80x60	9	128	40	95		175	LV-100S-ND.R-TS	LV-100S-ND.R-TF	LV-100S-ND.R-TSFP
									175	LV-100S-ND.S-TS	LV-100S-ND.S-TF	LV-100S-ND.S-TSFP
125S	40	135x110	105x80	11	178	50	140		250	LV-125S-ND.B-TS	LV-125S-ND.B-TF	LV-125S-ND.B-TSFP
									250	LV-125S-ND.R-TS	LV-125S-ND.R-TF	LV-125S-ND.R-TSFP
									250	LV-125S-ND.S-TS	LV-125S-ND.S-TF	LV-125S-ND.S-TSFP
150S	45	135x110	105x80	11	210	53	140		350	LV-150S-ND.B-TS	LV-150S-ND.B-TF	LV-150S-ND.B-TSFP
									350	LV-150S-ND.R-TS	LV-150S-ND.R-TF	LV-150S-ND.R-TSFP
									350	LV-150S-ND.S-TS	LV-150S-ND.S-TF	LV-150S-ND.S-TSFP
175	45	135x110	105x80	11	223	53	140		400	LV-175-ND.B-TS	LV-175-ND.B-TF	LV-175-ND.B-TSFP
									400	LV-175-ND.R-TS	LV-175-ND.R-TF	LV-175-ND.R-TSFP
									400	LV-175-ND.S-TS	LV-175-ND.S-TF	LV-175-ND.S-TSFP
200	50	135x110	105x80	11	245	65	140		550	LV-200-ND.B-TS	LV-200-ND.B-TF	LV-200-ND.B-TSFP
									550	LV-200-ND.R-TS	LV-200-ND.R-TF	LV-200-ND.R-TSFP
									550	LV-200-ND.S-TS	LV-200-ND.S-TF	LV-200-ND.S-TSFP
250	60	135x110	105x80	11	297	67	140		800	LV-250-ND.B-TS	LV-250-ND.B-TF	LV-250-ND.B-TSFP
									800	LV-250-ND.S-TS	LV-250-ND.S-TF	LV-250-ND.S-TSFP

roda s a

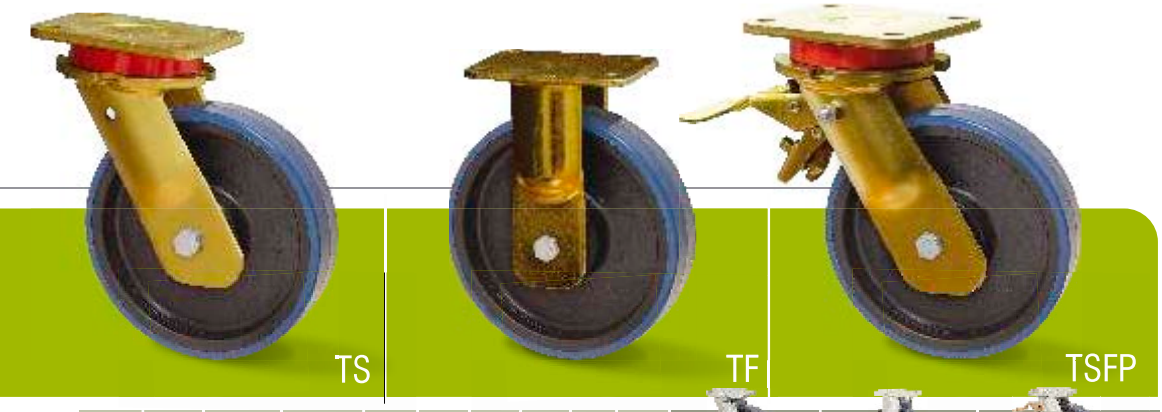

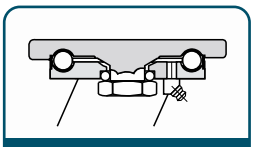

podrška support **LLAK**

strana.page.11

									Kg			
100S	40	135x110	105x80	11	148	42	110		175	LLAK-100S-ND.R-TS	LLAK-100S-ND.R-TF	LLAK-100S-ND.R-TSFP
									175	LLAK-100S-ND.S-TS	LLAK-100S-ND.S-TF	LLAK-100S-ND.S-TSFP
125S	40	135x110	105x80	11	170	50	130		250	LLAK-125S-ND.B-TS	LLAK-125S-ND.B-TF	LLAK-125S-ND.B-TSFP
									250	LLAK-125S-ND.R-TS	LLAK-125S-ND.R-TF	LLAK-125S-ND.R-TSFP
									250	LLAK-125S-ND.S-TS	LLAK-125S-ND.S-TF	LLAK-125S-ND.S-TSFP
150S	45	135x110	105x80	11	200	57	130		350	LLAK-150S-ND.B-TS	LLAK-150S-ND.B-TF	LLAK-150S-ND.B-TSFP
									350	LLAK-150S-ND.R-TS	LLAK-150S-ND.R-TF	LLAK-150S-ND.R-TSFP
									350	LLAK-150S-ND.S-TS	LLAK-150S-ND.S-TF	LLAK-150S-ND.S-TSFP
200	50	135x110	105x80	11	245	65	130		500	LLAK-200-ND.B-TS	LLAK-200-ND.B-TF	LLAK-200-ND.B-TSFP
									500	LLAK-200-ND.R-TS	LLAK-200-ND.R-TF	LLAK-200-ND.R-TSFP
									500	LLAK-200-ND.S-TS	LLAK-200-ND.S-TF	LLAK-200-ND.S-TSFP
250	60	175x145	140x105	11	305	80	135		800	LLAK-250-ND.B-TS	LLAK-250-ND.B-TF	LLAK-250-ND.B-TSFP
									800	LLAK-250-ND.S-TS	LLAK-250-ND.S-TF	LLAK-250-ND.S-TSFP

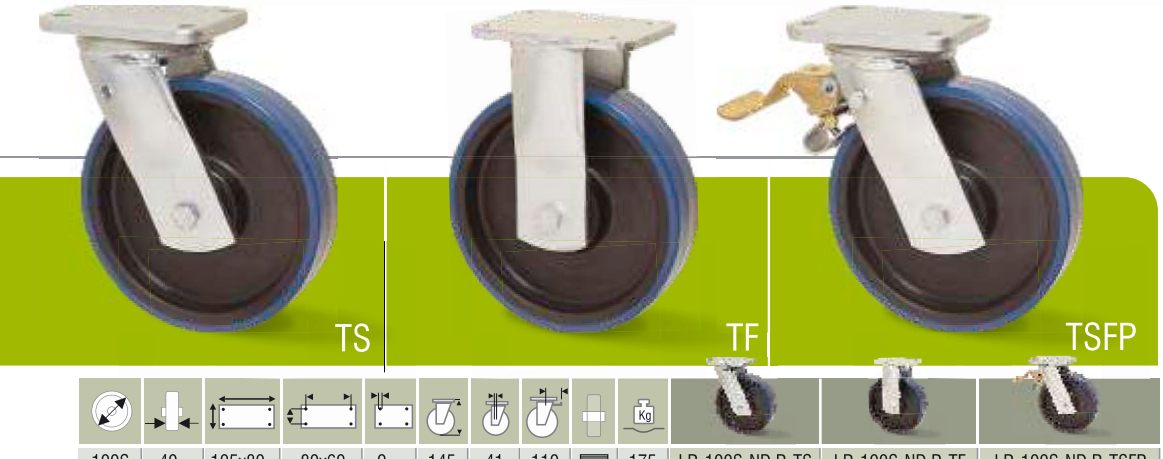

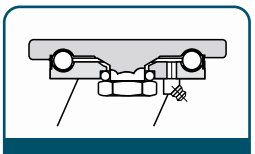

podrška support **LR**

strana.page.11

									Kg			
100S	40	105x80	80x60	9	145	41	110		175	LR-100S-ND.R-TS	LR-100S-ND.R-TF	LR-100S-ND.R-TSFP
									175	LR-100S-ND.S-TS	LR-100S-ND.S-TF	LR-100S-ND.S-TSFP
125S	40	135x110	105x80	11	170	50	130		250	LR-125S-ND.B-TS	LR-125S-ND.B-TF	LR-125S-ND.B-TSFP
									250	LR-125S-ND.R-TS	LR-125S-ND.R-TF	LR-125S-ND.R-TSFP
									250	LR-125S-ND.S-TS	LR-125S-ND.S-TF	LR-125S-ND.S-TSFP
150S	45	135x110	105x80	11	200	55	130		350	LR-150S-ND.B-TS	LR-150S-ND.B-TF	LR-150S-ND.B-TSFP
									350	LR-150S-ND.R-TS	LR-150S-ND.R-TF	LR-150S-ND.R-TSFP
									350	LR-150S-ND.S-TS	LR-150S-ND.S-TF	LR-150S-ND.S-TSFP
175	45	135x110	105x80	11	233	60	130		400	LR-175-ND.B-TS	LR-175-ND.B-TF	LR-175-ND.B-TSFP
									400	LR-175-ND.R-TS	LR-175-ND.R-TF	LR-175-ND.R-TSFP
									400	LR-175-ND.S-TS	LR-175-ND.S-TF	LR-175-ND.S-TSFP
200	50	135x110	105x80	11	245	60	130		500	LR-200-ND.B-TS	LR-200-ND.B-TF	LR-200-ND.B-TSFP
									500	LR-200-ND.R-TS	LR-200-ND.R-TF	LR-200-ND.R-TSFP
									500	LR-200-ND.S-TS	LR-200-ND.S-TF	LR-200-ND.S-TSFP
250	60	200x160	160x120	15	310	72	135		800	LR-250-ND.B-TS	LR-250-ND.B-TF	LR-250-ND.B-TSFP
									800	LR-250-ND.S-TS	LR-250-ND.S-TF	LR-250-ND.S-TSFP

ZABELEŠKE | NOTES

SERIJA SERIES AO

- Liveni Poliurethane
- Ojačani aluminijumski centar
- Ležaj osovine

kuglični [S]

- Cast Polyurethane
- Reinforced aluminum center
- Axle bearing:

ball [S]

					kg	CODE
100	30	12	41		200	WL-100-AO.S12
100S	40	12	40		200	WL-100S-AO.S12
		15	47		250	WL-100S-AO.S15
100X	50	20	61		300	WL-100X-AO.S20
125	30	15	47		250	WL-125-AO.S15
125S	50	20	61		350	WL-125S-AO.S20
150	40	20	61		400	WL-150-AO.S20
160	50	20	61		600	WL-160-AO.S20
	50	25	60		600	WL-160-AO.S25
180	50	20	60		700	WL-180-AO.S20
	50	25	60		700	WL-180-AO.S25
200	50	20	61		800	WL-200-AO.S20
	50	25	61		800	WL-200-AO.S25
250	60	25	60		1000	WL-250-AO.S25
	60	30	60		1000	WL-250-AO.S30

rodasa

AO SERIJA SERIES

	100	125	125 S	150	160	180	200
	12mm	12mm	16mm	16mm	16mm	16mm	16mm

	100	125	125 S	150	160	180	200
	20x50	22x50	27x60	27x60	27x60	27x60	27x60

podrška support 1

strana.page.11

100	30	105x85	80x60	9	128	38	120		120	1-100-AO.S-TS	1-100-AO.S-TF	1-100-AO.S-TSBK
125	30	105x85	80x60	9	155	45	120		180	1-125-AO.S-TS	1-125-AO.S-TF	1-125-AO.S-TSBK
125S	50	135x110	105x80	11	164	55	146		250	1-125S-AO.S-TS	1-125S-AO.S-TF	1-125S-AO.S-TSBK
150	40	135x110	105x80	11	194	55	146		300	1-150-AO.S-TS	1-150-AO.S-TF	1-150-AO.S-TSBK
160	50	135x110	105x80	11	199	55	146		300	1-160-AO.S-TS	1-160-AO.S-TF	1-160-AO.S-TSBK
180	50	135x110	105x80	11	219	55	146		300	1-180-AO.S-TS	1-180-AO.S-TF	1-180-AO.S-TSBK
200	50	135x110	105x80	11	239	55	146		300	1-200-AO.S-TS	1-200-AO.S-TF	1-200-AO.S-TSBK

Za svaki različiti tip fitinga, zamenite -TS od relativne šifre sa gornjom pločom, sa specifičnim opisom (-HS za rupu za vijke, -FRS za stub)

Primer: 1-100-AO.S-**TS** sa gornjom pločom
1-100-AO.S-**HS** s otvorom za vijak
1-100-AO.S-**FRS** sa stablom

Za kočnicu, dodajte BK na kraju relativnog koda

Primer: 1-100-AO.S-**HS** sa rupom za vijke
1-100-AO.S-**HSBK** sa otvorom za vijke i kočnicom

For each different type of fitting, substitute –TS from the relative code with top plate, with the specific description (-HS for bolt hole -FRS for stem)

Example: 1-100-AO.S-**TS** with top plate
1-100-AO.S-**HS** with bolt hole
1-100-AO.S-**FRS** with stem

For brake, add –BK at the end of the relative code

Example: 1-100-AO.S-**HS** with bolt hole
1-100-AO.S-**HSBK** with bolt hole and brake

roda s a

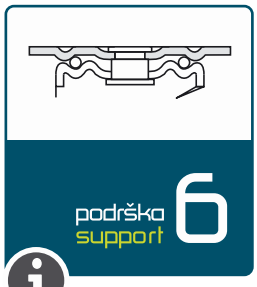

strana.page.11

100S	40	128x102	105x80	10	125	25		225	6-100S-A0.S-TS	-
		120x80	100x48	10	125	-		225	-	6-100S-A0.S-TF
125	30	145x101	115x80	10	154	30		250	6-125-A0.S-TS	-
		145x110	115x80	10	154	-		250	-	6-125-A0.S-TF
150S	40	162x132	140x105	10	182	42		360	6-150S-A0.S-TS	-
		171x108	130x67	10	182	-		360	-	6-150S-A0.S-TF

strana.page.11

100	30	105x85	80x60	9	132	40	98		200	7-100-A0.S-TS	7-100-A0.S-TF	7-100-A0.S-TSFP
125	30	105x85	80x60	9	160	40	104		250	7-125-A0.S-TS	7-125-A0.S-TF	7-125-A0.S-TSFP
150	40	140x110	105x80	11	185	41	104		400	7-150-A0.S-TS	7-150-A0.S-TF	7-150-A0.S-TSFP
160	50	140x110	105x80	11	205	52	139		600	7-160-A0.S-TS	7-160-A0.S-TF	7-160-A0.S-TSFP
180	50	140x110	105x80	11	235	55	130		700	7-180-A0.S-TS	7-180-A0.S-TF	7-180-A0.S-TSFP
200	50	140x110	105x80	11	243	55	130		800	7-200-A0.S-TS	7-200-A0.S-TF	7-200-A0.S-TSFP

podrška support **H**

strana.page.11

									Kg			
100X	50	135x110	105x80	11	148	55	110		300	H-100X-AO.S-TS	H-100X-AO.S-TF	H-100X-AO.S-TSFP
125S	50	135x110	105x80	11	175	55	110		350	H-125S-AO.S-TS	H-125S-AO.S-TF	H-125S-AO.S-TSFP
150	40	135x110	105x80	11	200	58	110		400	H-150-AO.S-TS	H-150-AO.S-TF	H-150-AO.S-TSFP
160	50	135x110	105x80	11	205	58	110		600	H-160-AO.S-TS	H-160-AO.S-TF	H-160-AO.S-TSFP
180	50	135x110	105x80	11	240	65	110		700	H-180-AO.S-TS	H-180-AO.S-TF	H-180-AO.S-TSFP
200	50	135x110	105x80	11	250	65	110		800	H-200-AO.S-TS	H-200-AO.S-TF	H-200-AO.S-TSFP
250	60	135x110	105x80	11	300	65	110		1000	H-250-AO.S-TS	H-250-AO.S-TF	H-250-AO.S-TSFP

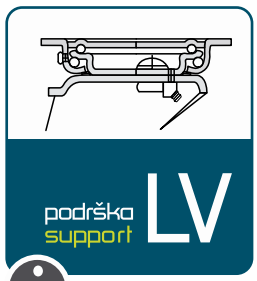

podrška support **LV**

strana.page.11

									Kg			
100	30	105x85	80x60	9	128	40	95		200	LV-100-AO.S-TS	LV-100-AO.S-TF	LV-100-AO.S-TSFP
100S	40	105x85	80x60	9	128	40	95		250	LV-100S-AO.S-TS	LV-100S-AO.S-TF	LV-100S-AO.S-TSFP
125S	50	135x110	105x80	11	178	50	140		350	LV-125S-AO.S-TS	LV-125S-AO.S-TF	LV-125S-AO.S-TSFP
150	40	135x110	105x80	11	210	53	140		400	LV-150-AO.S-TS	LV-150-AO.S-TF	LV-150-AO.S-TSFP
160	50	135x110	105x80	11	215	53	140		600	LV-160-AO.S-TS	LV-160-AO.S-TF	LV-160-AO.S-TSFP
180	50	135x110	105x80	11	225	53	140		700	LV-180-AO.S-TS	LV-180-AO.S-TF	LV-180-AO.S-TSFP
200	50	135x110	105x80	11	245	65	140		800	LV-200-AO.S-TS	LV-200-AO.S-TF	LV-200-AO.S-TSFP
250	60	135x110	105x80	11	297	67	140		1000	LV-250-AO.S-TS	LV-250-AO.S-TF	LV-250-AO.S-TSFP

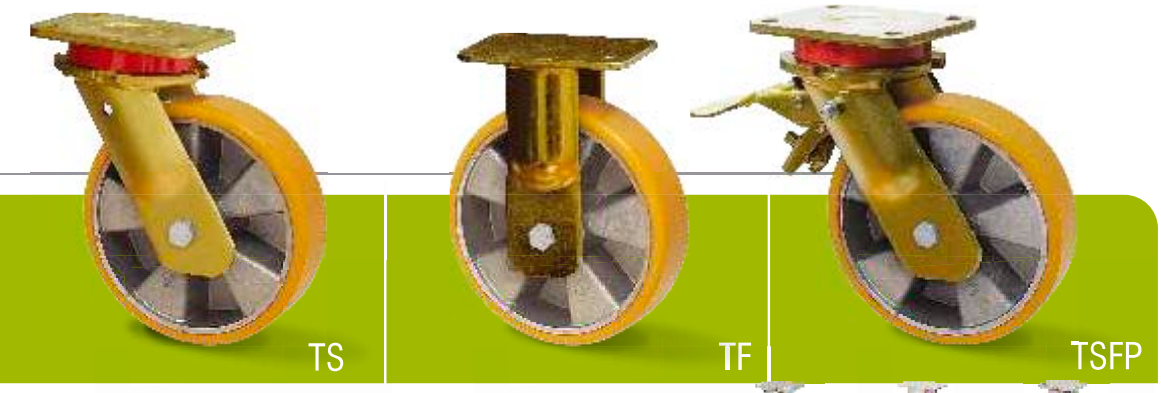

strana.page.11

100S	40	135x110	105x80	11	148	42	110		250	LLAK-100S-A0.S-TS	LLAK-100S-A0.S-TF	LLAK-100S-A0.S-TSFP
125S	50	135x110	105x80	11	170	50	130		350	LLAK-125S-A0.S-TS	LLAK-125S-A0.S-TF	LLAK-125S-A0.S-TSFP
150	40	135x110	105x80	11	200	57	130		400	LLAK-150-A0.S-TS	LLAK-150-A0.S-TF	LLAK-150-A0.S-TSFP
200	50	135x110	105x80	11	245	65	130		800	LLAK-200-A0.S-TS	LLAK-200-A0.S-TF	LLAK-200-A0.S-TSFP
250	60	135x110	105x80	11	305	80	135		1000	LLAK-250-A0.S-TS	LLAK-250-A0.S-TF	LLAK-250-A0.S-TSFP

strana.page.11

100S	40	105x85	80x60	9	145	41	110		250	LR-100S-A0.S-TS	LR-100S-A0.S-TF	LR-100S-A0.S-TSFP
125S	50	135x110	105x80	11	170	50	130		350	LR-125S-A0.S-TS	LR-125S-A0.S-TF	LR-125S-A0.S-TSFP
150	40	135x110	105x80	11	200	55	130		400	LR-150-A0.S-TS	LR-150-A0.S-TF	LR-150-A0.S-TSFP
160	50	135x110	105x80	11	205	55	130		600	LR-160-A0.S-TS	LR-160-A0.S-TF	LR-160-A0.S-TSFP
180	50	135x110	105x80	11	235	60	130		700	LR-180-A0.S-TS	LR-180-A0.S-TF	LR-180-A0.S-TSFP
200	50	135x110	105x80	11	245	60	130		800	LR-200-A0.S-TS	LR-200-A0.S-TF	LR-200-A0.S-TSFP
250	60	200x160	160x120	11	305	72	130		1000	LR-250-A0.S-TS	LR-250-A0.S-TF	LR-250-A0.S-TSFP

ZABELEŠKE | NOTES

SERIJA SERIES AOE

- **Elastični** Poliurethane
- Ojačani aluminijumski centar
- Ležaj osovine

kuglični [S]

- **Elastic** polyurethane
- Reinforced aluminum center
- Axle bearing:

ball [S]

						CODE
100	40	12	40		300	WL-100-AOE.S12
	40	15	40		300	WL-100-AOE.S15
100X	50	20	60		380	WL-100X-AOE.S20
125	40	20	50		350	WL-125-AOE.S20
	40	25	50		350	WL-125-AOE.S25
125S	50	20	60		450	WL-125S-AOE.S20
160	50	20	60		600	WL-160-AOE.S20
	50	25	60		600	WL-160-AOE.S25
180	50	20	60		670	WL-180-AOE.S20
	50	25	60		670	WL-180-AOE.S25
200	50	20	60		700	WL-200-AOE.S20
	50	25	60		700	WL-200-AOE.S25
230	50	20	60		800	WL-230-AOE.S20
	50	25	60		800	WL-230-AOE.S25
250	50	20	60		800	WL-250-AOE.S20
	50	25	60		800	WL-250-AOE.S25

rodasa

AOE

SERIJA
SERIES

	100	125	160	180	200
	12mm	16mm	16mm	16mm	16mm

	100	125	160	180	200
	20x50	27x60	27x60	27x60	27x60

podrška
support 1

strana.page.11

100	40	105x85	80x60	9	128	45	120		180	1-100-AOE.S-TS	1-100-AOE.S-TF	1-100-AOE.S-TSBK
125	40	135x110	105x80	11	164	55	146		300	1-125-AOE.S-TS	1-125-AOE.S-TF	1-125-AOE.S-TSBK
160	50	135x110	105x80	11	199	55	146		300	1-160-AOE.S-TS	1-160-AOE.S-TF	1-160-AOE.S-TSBK
180	50	135x110	105x80	11	219	55	146		300	1-180-AOE.S-TS	1-180-AOE.S-TF	1-180-AOE.S-TSBK
200	50	135x110	105x80	11	239	55	146		300	1-200-AOE.S-TS	1-200-AOE.S-TF	1-200-AOE.S-TSBK
230	50	135x110	105x80	11	268	55	-		300	1-230-AOE.S-TS	1-230-AOE.S-TF	-
250	50	135x110	105x80	11	290	55	-		300	1-250-AOE.S-TS	1-250-AOE.S-TF	-

Za svaki različiti tip fitinga, zamenite -TS od relativne šifre sa gornjom pločom, sa specifičnim opisom (-HS za rupu za vijke, -FRS za stub)

Primer: 1-100-AOE.S-**TS** sa gornjom pločom
1-100-AOE.S-**HS** s otvorom za vijak
1-100-AOE.S-**FRS** sa stablom

Za kočnicu, dodajte BK na kraju relativnog koda

Primer: 1-100-AOE.S-**HS** sa rupom za vijke
1-100-AOE.S-**HSBK** sa otvorom za vijke i kočnicom

For each different type of fitting, substitute –TS from the relative code with top plate, with the specific description (-HS for bolt hole -FRS for stem)

Example: 1-100-AOE.S-**TS** with top plate
1-100-AOE.S-**HS** with bolt hole
1-100-AOE.S-**FRS** with stem

For brake, add –BK at the end of the relative code

Example: 1-100-AOE.S-**HS** with bolt hole
1-100-AOE.S-**HSBK** with bolt hole and brake

roda s a

strana.page.11

									Kg			
100X	50	135X110	105X80	11	148	55	110		380	H-100X-AOE.S-TS	H-100X-AOE.S-TF	H-100X-AOE.S-TSFP
125	40	135X110	105X80	11	175	55	110		350	H-125-AOE.S-TS	H-125-AOE.S-TF	H-125-AOE.S-TSFP
125S	50	135x110	105x80	11	175	55	110		450	H-125S-AOE.S-TS	H-125S-AOE.S-TF	H-125S-AOE.S-TSFP
160	50	135x110	105x80	11	205	58	110		600	H-160-AOE.S-TS	H-160-AOE.S-TF	H-160-AOE.S-TSFP
180	50	135x110	105x80	11	240	65	110		670	H-180-AOE.S-TS	H-180-AOE.S-TF	H-180-AOE.S-TSFP
200	50	135x110	105x80	11	250	65	110		700	H-200-AOE.S-TS	H-200-AOE.S-TF	H-200-AOE.S-TSFP
230	50	135X110	105X80	11	290	65	-		800	H-230-AOE.S-TS	H-230-AOE.S-TF	-
250	50	135x110	105x80	11	300	65	110		800	H-250-AOE.S-TS	H-250-AOE.S-TF	H-250-AOE.S-TSFP

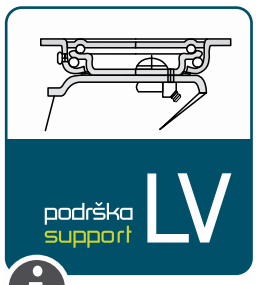

strana.page.11

									Kg			
100	40	100x85	80x60	9	128	40	95		300	LV-100-AOE.S-TS	LV-100-AOE.S-TF	LV-100-AOE.S-TSFP
125	40	135x110	105X80	11	178	50	140		350	LV-125-AOE.S-TS	LV-125-AOE.S-TF	LV-125-AOE.S-TSFP
160	50	135x110	105x80	11	215	53	140		600	LV-160-AOE.S-TS	LV-160-AOE.S-TF	LV-160-AOE.S-TSFP
180	50	135x110	105x80	11	225	53	140		670	LV-180-AOE.S-TS	LV-180-AOE.S-TF	LV-180-AOE.S-TSFP
200	50	135x110	105x80	11	245	65	140		700	LV-200-AOE.S-TS	LV-200-AOE.S-TF	LV-200-AOE.S-TSFP
230	50	135x110	105X80	11	270	64	140		800	LV-230-AOE.S-TS	LV-230-AOE.S-TF	LV-230-AOE.S-TSFP
250	50	135x110	105x80	11	297	67	140		800	LV-250-AOE.S-TS	LV-250-AOE.S-TF	LV-250-AOE.S-TSFP

strana.page.11

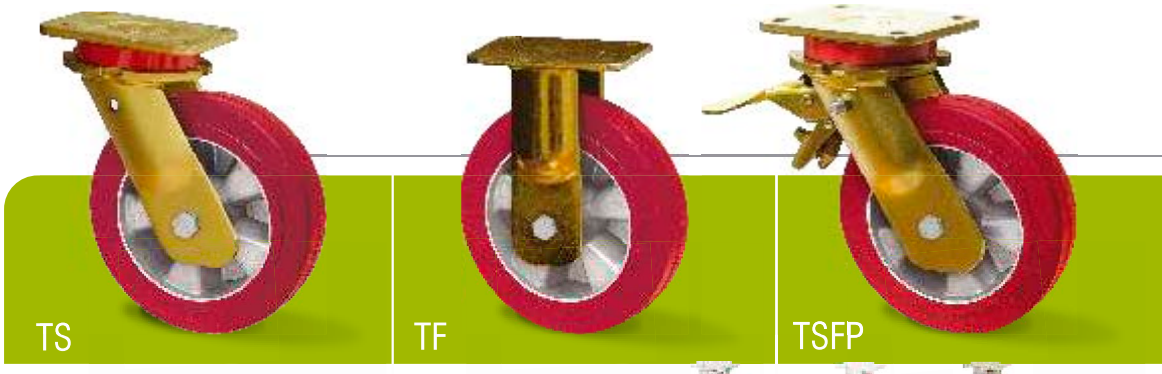

100	40	135x110	105x80	11	148	42	110		300	LLAK-100-AOE.S-TS	LLAK-100-AOE.S-TF	LLAK-100-AOE.S-TSFP
125	40	135x110	105x80	11	170	50	130		350	LLAK-125-AOE.S-TS	LLAK-125-AOE.S-TF	LLAK-125-AOE.S-TSFP
125S	50	135x110	105x80	11	170	50	130		450	LLAK-125S-AOE.S-TS	LLAK-125S-AOE.S-TF	LLAK-125S-AOE.S-TSFP
200	50	135x110	105x80	11	245	65	130		700	LLAK-200-AOE.S-TS	LLAK-200-AOE.S-TF	LLAK-200-AOE.S-TSFP
250	50	135x110	105x80	11	305	80	135		800	LLAK-250-AOE.S-TS	LLAK-250-AOE.S-TF	LLAK-250-AOE.S-TSFP

strana.page.11

100	40	105x85	80x60	9	145	41	110		300	LR-100-AOE.S-TS	LR-100-AOE.S-TF	LR-100-AOE.S-TSFP
125	40	135x110	105x80	11	170	50	130		350	LR-125-AOE.S-TS	LR-125-AOE.S-TF	LR-125-AOE.S-TSFP
125S	50	135x110	105x80	11	170	50	130		450	LR-125S-AOE.S-TS	LR-125S-AOE.S-TF	LR-125S-AOE.S-TSFP
160	50	135x110	105x80	11	205	55	130		600	LR-160-AOE.S-TS	LR-160-AOE.S-TF	LR-160-AOE.S-TSFP
180	50	135x110	105x80	11	235	60	130		670	LR-180-AOE.S-TS	LR-180-AOE.S-TF	LR-180-AOE.S-TSFP
200	50	135x110	105x80	11	245	60	130		700	LR-200-AOE.S-TS	LR-200-AOE.S-TF	LR-200-AOE.S-TSFP
230	50	135x110	105x80	11	295	72	130		800	LR-230-AOE.S-TS	LR-230-AOE.S-TF	LR-230-AOE.S-TSFP
250	50	135x110	105x80	11	305	72	130		800	LR-250-AOE.S-TS	LR-250-AOE.S-TF	LR-250-AOE.S-TSFP

SERIJA SERIES XO

- Liveni Poliurethane
- Centar od livenog gvožđa
- Ležaj osovine
  kuglični [S]

- Cast Polyurethane
- Cast iron center
- Axle bearing:
  ball [S]

						CODE
080	30	12	41		220	WL-080-XO.S12
100	30	12	41		250	WL-100-XO.S12
	30	15	41		250	WL-100-XO.S15
100X	50	20	61		400	WL-100X-XO.S20
125	30	15	47		300	WL-125-XO.S15
125S	50	20	61		500	WL-125S-XO.S20
150	30	15	47		350	WL-150-XO.S15
150S	40	20	40		550	WL-150S-XO.S20
150X	50	20	61		700	WL-150X-XO.S20
175	40	20	61		650	WL-175-XO.S20
180	50	25	61		800	WL-180-XO.S25
200	40	20	61		750	WL-200-XO.S20
200S	50	20	61		1000	WL-200S-XO.S20
	50	25	61		1000	WL-200S-XO.S25
200X	75	25	75		1350	WL-200X-XO.S25
	80	30	90		1500	WL-200X-XO.S30
250	50	25	61		1200	WL-250-XO.S25
250S	60	25	61		1400	WL-250S-XO.S25
	60	30	75		1400	WL-250S-XO.S30
250X	75	30	75		1700	WL-250X-XO.S30
	80	30	90		1800	WL-250X-XO.S30-90
300	70	30	70		2200	WL-300-XO.S30
300S	75	30	85		2000	WL-300S-XO.S30
300X	100	35	120		2500	WL-300X-XO.S35
360	75	40	90		2200	WL-360-XO.S40
400	100	40	120		3500	WL-400-XO.S40
500	140	60	150		5200	WL-500-XO.S60

rodasa

XO SERIJA SERIES

	80	100	125	125 S	150	150 S	175	200
	12mm	12mm	12mm	16mm	16mm	16mm	16mm	16mm

	80	100	125	125 S	150	150 S	175	200
	20x50	20x50	22x50	27x60	27x60	27x60	27x60	27x60

podrška support 1

strana.page.11

									kg			
080	30	105x85	80x60	9	108	38	120		120	1-080-XO.S-TS	1-080-XO.S-TF	1-080-XO.S-TSBK
100	30	105x85	80x60	9	128	38	120		120	1-100-XO.S-TS	1-100-XO.S-TF	1-100-XO.S-TSBK
125	30	105x85	80x60	9	155	45	120		180	1-125-XO.S-TS	1-125-XO.S-TF	1-125-XO.S-TSBK
125S	50	135x110	105x80	11	164	55	146		250	1-125S-XO.S-TS	1-125S-XO.S-TF	1-125S-XO.S-TSBK
150	30	105x85	80x60	9	183	45	120		180	1-150-XO.S-TS	1-150-XO.S-TF	1-150-XO.S-TSBK
150S	40	135x110	105x80	11	194	55	146		300	1-150S-XO.S-TS	1-150S-XO.S-TF	1-150S-XO.S-TSBK
175	40	135x110	105x80	11	217	55	146		300	1-175-XO.S-TS	1-175-XO.S-TF	1-175-XO.S-TSBK
200	40	135x110	105x80	11	239	55	146		300	1-200-XO.S-TS	1-200-XO.S-TF	1-200-XO.S-TSBK

Za svaki različiti tip fitinga, zamenite -TS od relativne šifre sa gornjom pločom, sa specifičnim opisom (-HS za rupu za vijke, -FRS za stub)

Primer: 1-100-XO.S-**TS** sa gornjom pločom
1-100-XO.S-**HS** s otvorom za vijak
1-100-XO.S-**FRS** sa stablom

Za kočnicu, dodajte BK na kraju relativnog koda

Primer: 1-100-XO.S-**HS** sa rupom za vijke
1-100-XO.S-**HSBK** sa otvorom za vijke i kočnicom

For each different type of fitting, substitute –TS from the relative code with top plate, with the specific description (-HS for bolt hole -FRS for stem)

Example: 1-100-XO.S-**TS** with top plate
1-100-XO.S-**HS** with bolt hole
1-100-XO.S-**FRS** with stem

For brake, add –BK at the end of the relative code

Example: 1-100-XO.S-**HS** with bolt hole
1-100-XO.S-**HSBK** with bolt hole and brake

roda s a

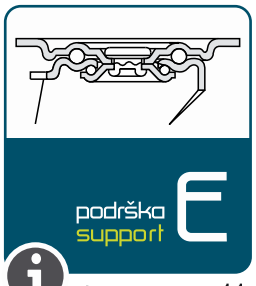

strana.page.11

100	30	105x85	80x60	8	128	28		250	E-100-XO.S-TS	E-100-XO.S-TF
125	30	105x85	80x60	8	154	29		250	E-125-XO.S-TS	E-125-XO.S-TF

strana.page.11

080	30	105x80	80x60	9	112	39	-		180	7-080-XO.S-TS	7-080-XO.S-TF	-
100	30	105x85	80x60	9	132	40	98		200	7-100-XO.S-TS	7-100-XO.S-TF	7-100-XO.S-TSFP
125	30	105x85	80x60	9	160	40	104		300	7-125-XO.S-TS	7-125-XO.S-TF	7-125-XO.S-TSFP
150S	40	140x110	105x80	11	186	41	104		400	7-150S-XO.S-TS	7-150S-XO.S-TF	7-150S-XO.S-TSFP
175	40	140x110	105x80	11	214	53	130		600	7-175-XO.S-TS	7-175-XO.S-TF	7-175-XO.S-TSFP
200	40	140x110	105x80	11	243	55	130		750	7-200-XO.S-TS	7-200-XO.S-TF	7-200-XO.S-TSFP
200S	50	140x110	105x80	11	243	55	130		880	7-200S-XO.S-TS	7-200S-XO.S-TF	7-200S-XO.S-TSFP
250	50	200x160	160x120	15	310	63	133		1200	7-250-XO.S-TS	7-250-XO.S-TF	7-250-XO.S-TSFP
250S	60	200x160	160x120	15	310	63	133		1200	7-250S-XO.S-TS	7-250S-XO.S-TF	7-250S-XO.S-TSFP

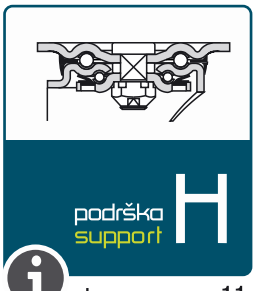

podrška support **H**

strana.page.11

									Kg			
100X	50	135x110	105x80	11	148	55	-		400	H-100X-XO.S-TS	H-100X-XO.S-TF	H-100X-XO.S-TSFP
125S	50	135x110	105x80	11	175	55	110		500	H-125S-XO.S-TS	H-125S-XO.S-TF	H-125S-XO.S-TSFP
150S	40	135x110	105x80	11	200	58	110		550	H-150S-XO.S-TS	H-150S-XO.S-TF	H-150S-XO.S-TSFP
150X	50	135x110	105x80	11	200	58	110		700	H-150X-XO.S-TS	H-150X-XO.S-TF	H-150X-XO.S-TSFP
180	50	135x110	105x80	11	240	65	110		750	H-180-XO.S-TS	H-180-XO.S-TF	H-180-XO.S-TSFP
200	40	135x110	105x80	11	250	65	110		750	H-200-XO.S-TS	H-200-XO.S-TF	H-200-XO.S-TSFP
200S	50	135x110	105x80	11	250	65	110		1000	H-200S-XO.S-TS	H-200S-XO.S-TF	H-200S-XO.S-TSFP
250	50	135x110	105x80	11	300	65	110		1000	H-250-XO.S-TS	H-250-XO.S-TF	H-250-XO.S-TSFP
250S	60	135x110	105x80	11	300	65	110		1000	H-250S-XO.S-TS	H-250S-XO.S-TF	H-250S-XO.S-TSFP

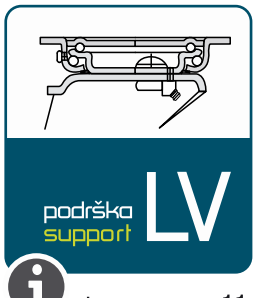

podrška support **LV**

strana.page.11

									Kg			
080	30	105x85	80x60	9	118	40	95		220	LV-080-XO.S-TS	LV-080-XO.S-TF	LV-080-XO.S-TSFP
100	30	105x85	80x60	9	128	40	95		250	LV-100-XO.S-TS	LV-100-XO.S-TF	LV-100-XO.S-TSFP
125	30	135x110	105x80	11	178	50	140		300	LV-125-XO.S-TS	LV-125-XO.S-TF	LV-125-XO.S-TSFP
125S	50	135x110	105x80	11	178	50	140		500	LV-125S-XO.S-TS	LV-125S-XO.S-TF	LV-125S-XO.S-TSFP
150S	40	135x110	105x80	11	210	53	140		550	LV-150S-XO.S-TS	LV-150S-XO.S-TF	LV-150S-XO.S-TSFP
150X	50	135x110	105x80	11	210	53	140		700	LV-150X-XO.S-TS	LV-150X-XO.S-TF	LV-150X-XO.S-TSFP
180	50	135x110	105x80	11	225	53	140		800	LV-180-XO.S-TS	LV-180-XO.S-TF	LV-180-XO.S-TSFP
200S	50	135x110	105x80	11	245	65	140		1000	LV-200S-XO.S-TS	LV-200S-XO.S-TF	LV-200S-XO.S-TSFP
250	50	135x110	105x80	11	297	67	140		1000	LV-250-XO.S-TS	LV-250-XO.S-TF	LV-250-XO.S-TSFP
250S	60	135x110	105x80	11	297	67	140		1000	LV-250S-XO.S-TS	LV-250S-XO.S-TF	LV-250S-XO.S-TSFP

roda s a

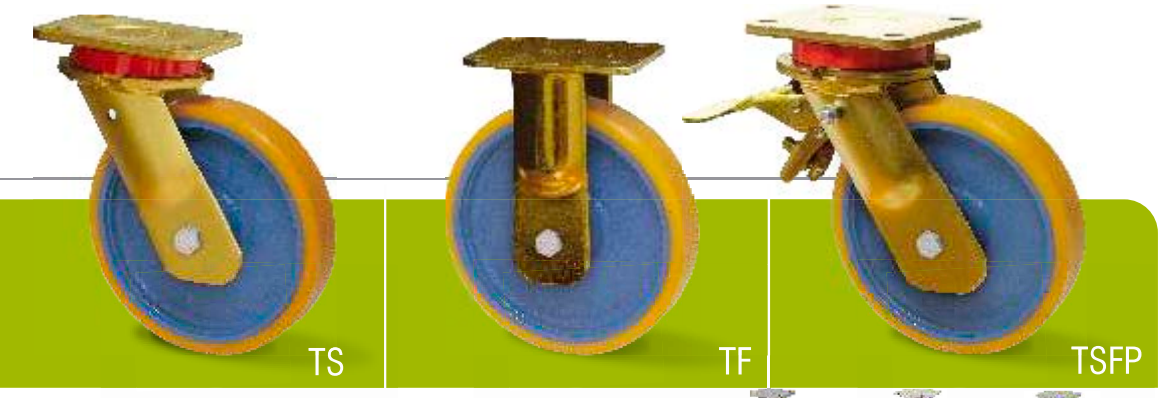

strana.page.11

									Kg			
100	30	135x110	105x80	11	148	42	110		250	LLAK-100-XO.S-TS	LLAK-100-XO.S-TF	LLAK-100-XO.S-TSFP
125S	50	135x110	105x80	11	170	50	130		500	LLAK-125S-XO.S-TS	LLAK-125S-XO.S-TF	LLAK-125S-XO.S-TSFP
150S	40	135x110	105x80	11	200	57	130		550	LLAK150S-XO.S-TS	LLAK-150S-XO.S-TF	LLAK-150S-XO.S-TSFP
150X	50	135x110	105x80	11	200	57	130		700	LLAK-150X-XO.S-TS	LLAK-150X-XO.S-TF	LLAK-150X-XO.S-TSFP
200S	50	135x110	105x80	11	245	65	130		1000	LLAK-200S-XO.S-TS	LLAK-200S-XO.S-TF	LLAK-200S-XO.S-TSFP
250	50	135x110	105x80	11	305	80	135		1200	LLAK-250-XO.S-TS	LR-250-XO.S-TF	LLAK-250-XO.S-TSFP
250S	60	175x145	140x105	11	305	80	135		1400	LLAK-250S-XO.S-TS	LLAK-250S-XO.S-TF	LLAK-250S-XO.S-TSFP

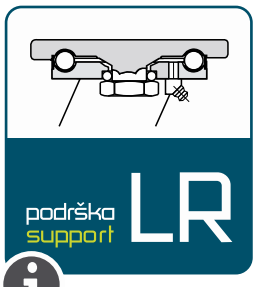

strana.page.11

									Kg			
100	30	105x85	80x60	9	145	41	110		250	LR-100-XO.S-TS	LR-100-XO.S-TF	LR-100-XO.S-TSFP
125S	50	135x110	105x80	11	170	50	130		500	LR-125S-XO.S-TS	LR-125S-XO.S-TF	LR-125S-XO.S-TSFP
150S	40	135x110	105x80	11	200	55	130		550	LR-150S-XO.S-TS	LR-150S-XO.S-TF	LR-150S-XO.S-TSFP
150X	50	135x110	105x80	11	200	55	130		700	LR-150X-XO.S-TS	LR-150X-XO.S-TF	LR-150X-XO.S-TSFP
180	50	135x110	105x80	11	235	60	130		800	LR-180-XO.S-TS	LR-180-XO.S-TF	LR-180-XO.S-TSFP
200S	50	135x110	105x80	11	245	60	130		1000	LR-200S-XO.S-TS	LR-200S-XO.S-TF	LR-200S-XO.S-TSFP
250	50	135x110	105x80	11	305	72	130		1100	LR-250-XO.S-TS	LR-250-XO.S-TF	LR-250-XO.S-TSFP
250S	60	200x160	160x120	15	310	72	135		1400	LR-250S-XO.S-TS	LR-250S-XO.S-TF	LR-250S-XO.S-TSFP
250X	75	200x160	160x120	15	310	72	135		1700	LR-250X-XO.S-TS	LR-250X-XO.S-TF	LR-250X-XO.S-TSFP

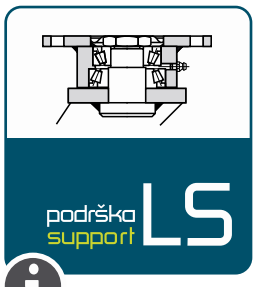

strana.page.11

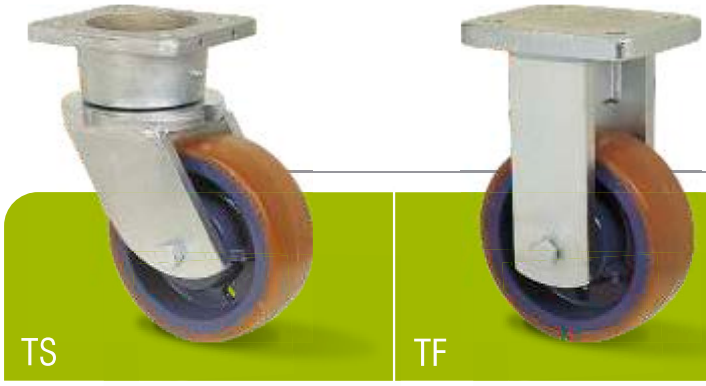

200X	75	178x153	127x102	17	305	72		1350	LS-200X-XO.S-TS	LS-200X-XO.S-TF
250X	75	178x153	127x102	17	356	72		1700	LS-250X-XO.S-TS	LS-250X-XO.S-TF
300S	75	178x153	127x102	17	422	72		2000	LS-300S-XO.S-TS	LS-300S-XO.S-TF
300X	100	178x153	127x102	17	422	72		2500	LS-300X-XO.S-TS	LS-300X-XO.S-TF

strana.page.11

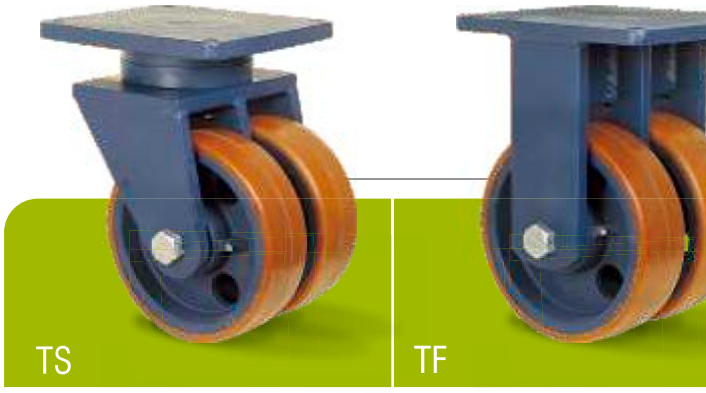

100X	2x50	200x160	170x130	13	175	33		900	LAK2-100X-XO.S-TS	LAK2-100X-XO.S-TF
125S	2x50	200x160	170x130	13	200	37		1100	LAK2-125S-XO.S-TS	LAK2-125S-XO.S-TF
150X	2x50	200x160	170x130	13	225	42		1300	LAK2-150X-XO.S-TS	LAK2-150X-XO.S-TF
200S	2x50	200x160	170x130	13	270	50		2000	LAK2-200S-XO.S-TS	LAK2-200S-XO.S-TF
250	2x50	200x160	170x130	13	325	62		2200	LAK2-250-XO.S-TS	LAK2-250-XO.S-TF
250X	2x75	270x250	230x210	17	365	82		3400	LAK2-250X-XO.S-TS	LAK2-250X-XO.S-TF
300S	2x75	270x250	230x210	17	415	93		4000	LAK2-300S-XO.S-TS	LAK2-300S-XO.S-TF
360	2x75	270x250	230x210	17	470	105		4400	LAK2-360-XO.S-TS	LAK2-360-XO.S-TF

SERIJA
SERIES
TPA

- Termoplastika siva neobeležena guma
- Thermoplastic center
- Ležaj osovine:
  - biksna [A]
  - kuglični [C]
  - inoks kuglični [X]
- SPECIJALNA JEDINJENJA: Antistatic

- Thermoplastic grey non marking rubber
- Thermoplastic center
- Axle bearing:
  - plain [A]
  - ball [C]
  - inox ball [X]
- SPECIAL COMPOUND: Antistatic

					kg	CODE
050L	18	8	21		35	WL-050L-TP.A08
	18	8	21		35	WL-050L-TP.C08
050M	24	8	28		50	WL-050M-TP.A08
	24	8	29		50	WL-050M-TP.C08
075M	24	8	28		60	WL-075M-TP.A08
	24	8	29		60	WL-075M-TP.C08
075S	32	10	36		80	WL-075S-TP.A10
	32	10	37		80	WL-075S-TP.C10
100M	24	8	28		70	WL-100M-TP.A08
	24	8	29		70	WL-100M-TP.C08
100S	32	10	36		90	WL-100S-TP.A10
	32	10	37		90	WL-100S-TP.C10
125M	24	8	28		80	WL-125M-TP.A08
	24	8	29		80	WL-125M-TP.C08
125S	32	10	36		100	WL-125S-TP.A10
	32	10	37		100	WL-125S-TP.C10
150S	32	10	36		100	WL-150S-TP.A10
	32	10	37		100	WL-150S-TP.C10

rodasa

TPA

SERIJA
SERIES

TS

TF

TSBK

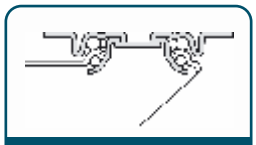

podrška
support
M-S

strana.page.11

									kg			
050L	18	42x42	30x30	5	68	10	77		35	L-050-TP.A-TS	L-050-TP.A-TF	L-050-TP.A-TSBK
									35	L-050-TP.C-TS	L-050-TP.C-TF	L-050-TP.C-TSBK
050M	24	60x60	43x43/49x49	6,4	73,5	25	86		50	M-050-TP.A-TS	M-050-TP.A-TF	M-050-TP.A-TSBK
									50	M-050-TP.C-TS	M-050-TP.C-TF	M-050-TP.C-TSBK
075M	24	60x60	43x43/49x49	6,4	101	30,5	91		60	M-075-TP.A-TS	M-075-TP.A-TF	M-075-TP.A-TSBK
									60	M-075-TP.C-TS	M-075-TP.C-TF	M-075-TP.C-TSBK
075S	32	90x70	65x45/75x55	9	109	28	95		70	S-075-TP.A-TS	S-075-TP.A-TF	S-075-TP.A-TSBK
									70	S-075-TP.C-TS	S-075-TP.C-TF	S-075-TP.C-TSBK
100M	24	60x60	43x43/49x49	6,4	123,5	40	101		70	M-100-TP.A-TS	M-100-TP.A-TF	M-100-TP.A-TSBK
									70	M-100-TP.C-TS	M-100-TP.C-TF	M-100-TP.C-TSBK
100S	32	90x70	65x45/75x55	9	131,5	40	107		90	S-100-TP.A-TS	S-100-TP.A-TF	S-100-TP.A-TSBK
									90	S-100-TP.C-TS	S-100-TP.C-TF	S-100-TP.C-TSBK
125M	24	60x60	43x43/49x49	6,4	148,5	43	104		80	M-125-TP.A-TS	M-125-TP.A-TF	M-125-TP.A-TSBK
									80	M-125-TP.C-TS	M-125-TP.C-TF	M-125-TP.C-TSBK
125S	32	90x70	65x45/75x55	9	156,5	40	107		100	S-125-TP.A-TS	S-125-TP.A-TF	S-125-TP.A-TSBK
									100	S-125-TP.C-TS	S-125-TP.C-TF	S-125-TP.C-TSBK
150S	32	90x70	65x45/75x55	9	181,5	45	112		100	S-150-TP.A-TS	S-150-TP.A-TF	S-150-TP.A-TSBK
									100	S-150-TP.C-TS	S-150-TP.C-TF	S-150-TP.C-TSBK

rodasa

									kg			
050M	24	60x60	43x43/49x49	6,4	73,5	25	86		50	MX-050-TP.A-TS	MX-050-TP.A-TF	MX-050-TP.A-TSBK
									50	MX-050-TP.X-TS	MX-050-TP.X-TF	MX-050-TP.X-TSBK
075M	24	60x60	43x43/49x49	6,4	101	30,5	91		60	MX-075-TP.A-TS	MX-075-TP.A-TF	MX-075-TP.A-TSBK
									60	MX-075-TP.X-TS	MX-075-TP.X-TF	MX-075-TP.X-TSBK
075S	32	90x70	65x45/75x55	9	109	28	95		70	SX-075-TP.A-TS	SX-075-TP.A-TF	SX-075-TP.A-TSBK
									70	SX-075-TP.X-TS	SX-075-TP.X-TF	SX-075-TP.X-TSBK
100M	24	60x60	43x43/49x49	6,4	123,5	40	101		70	MX-100-TP.A-TS	MX-100-TP.A-TF	MX-100-TP.A-TSBK
									70	MX-100-TP.X-TS	MX-100-TP.X-TF	MX-100-TP.X-TSBK
100S	32	90x70	65x45/75x55	9	131,5	40	107		90	SX-100-TP.A-TS	SX-100-TP.A-TF	SX-100-TP.A-TSBK
									90	SX-100-TP.X-TS	SX-100-TP.X-TF	SX-100-TP.X-TSBK
125M	24	60x60	43x43/49x49	6,4	148,5	43	104		80	MX-125-TP.A-TS	MX-125-TP.A-TF	MX-125-TP.A-TSBK
									80	MX-125-TP.X-TS	MX-125-TP.X-TF	MX-125-TP.X-TSBK
125S	32	90x70	65x45/75x55	9	156,5	40	107		100	SX-125-TP.X-TS	SX-125-TP.X-TF	SX-125-TP.X-TSBK
									100	SX-125-TP.A-TS	SX-125-TP.A-TF	SX-125-TP.A-TSBK
150S	32	90x70	65x45/75x55	6,4	181,5	45	112		100	SX-150-TP.A-TS	SX-150-TP.A-TF	SX-150-TP.A-TSBK
									100	SX-150-TP.X-TS	SX-150-TP.X-TF	SX-150-TP.X-TSBK

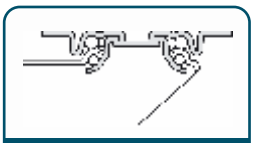

podrška | support

MX-SX

strana.page.11

TPA SERIJA SERIES

		BS	EQ	ER	FR	FR-8	FR-II	CD
M	50x24 75x24 100x24 125x24	M08x25 M10x20	21/24x80 24/27x90 27/31x90 31/35x90 35/40x100	19/23x80 23/26x80 26/30x90		8,2x20	11x22	
S	75x32 100x32 125x32 150x32	M10x30 M12x25			28X45 28X50 28X63			65x35/13

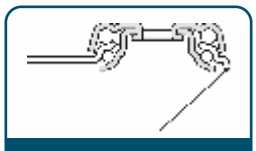

podrška support **M-S**

strana.page.11

							kg			
050L	18	10,2	68	10	77		40	L-050-TP.A-HS	-	L-050-TP.A-HSBK
							40	L-050-TP.C-HS	-	L-050-TP.C-HSBK
050M	24	10,2	73,5	25	86		50	M-050-TP.A-HS	M-050-TP.A-HF	M-050-TP.A-HSBK
							50	M-050-TP.C-HS	M-050-TP.C-HF	M-050-TP.C-HSBK
075M	24	10,2	101	30,5	91		60	M-075-TP.A-HS	M-075-TP.A-HF	M-075-TP.A-HSBK
							60	M-075-TP.C-HS	M-075-TP.C-HF	M-075-TP.C-HSBK
075S	32	12,2	109	28	95		70	S-075-TP.A-HS	S-075-TP.A-HF	S-075-TP.A-HSBK
							70	S-075-TP.C-HS	S-075-TP.C-HF	S-075-TP.C-HSBK
100M	24	10,2	123,5	40	101		70	M-100-TP.A-HS	M-100-TP.A-HF	M-100-TP.A-HSBK
							70	M-100-TP.C-HS	M-100-TP.C-HF	M-100-TP.C-HSBK
100S	32	12,2	131,5	40	107		90	S-100-TP.A-HS	S-100-TP.A-HF	S-100-TP.A-HSBK
							90	S-100-TP.C-HS	S-100-TP.C-HF	S-100-TP.C-HSBK
125M	24	10,2	148,5	43	104		80	M-125-TP.A-HS	M-125-TP.A-HF	M-125-TP.A-HSBK
							80	M-125-TP.C-HS	M-125-TP.C-HF	M-125-TP.C-HSBK
125S	32	12,2	156,5	40	107		100	S-125-TP.A-HS	S-125-TP.A-HF	S-125-TP.A-HSBK
							100	S-125-TP.C-HS	S-125-TP.C-HF	S-125-TP.C-HSBK
150S	32	12,2	181,5	45	112		100	S-150-TP.A-HS	S-150-TP.A-HF	S-150-TP.A-HSBK
							100	S-150-TP.C-HS	S-150-TP.C-HF	S-150-TP.C-HSBK

Za različiti tip fitinga, zamenite -HS od relativnog koda sa otvorom za vijke, sa specifičnim opisom (-BS za stub vijka / FRS za stabljiku / EKS ili ERS za ekspanziju itd.)

Primer:
M-075-TP.A-**HS** sa rupom za vijke
M-075-TP.A-**BS (M10Ks20)** sa navojem M10Ks20
M-075-TP.A-**ER.S (23/26)** sa okruglim proširivačem 23 / 26mm

For each different type of fitting, substitute –HS from the relative code with bolt-hole, with the specific description (-BS for bolt hole / FRS for stem / EQS or ERS for expander etc)

Example:
M-075-TP.A-**HS** with bolt-hole
M-075-TP.A-**BS (M10x20)** with thread M10x20 mm
M-075-TP.A-**ER.S (23/26)** with round expander 23/26 mm

roda s a

BS	EQ	ER	FR	FR-8	FR-II	
M08x25 M10x20	21/24x80 24/27x90 27/31x90 31/35x90 35/40x100	19/23x80 23/26x80 26/30x90		8,2x20	11x22	
M10x30 M12x25			28X45 28X50 28X63			

							kg			
050M	24	10,2	73,5	25	86		50	MX-050-TP.A-HS	MX-050-TP.A-HF	MX-050-TP.A-HSBK
							50	MX-050-TP.X-HS	MX-050-TP.X-HF	MX-050-TP.X-HSBK
075M	24	10,2	101	30,5	91		60	MX-075-TP.A-HS	MX-075-TP.A-HF	MX-075-TP.A-HSBK
							60	MX-075-TP.X-HS	MX-075-TP.X-HF	MX-075-TP.X-HSBK
075S	32	12,2	109	28	95		70	SX-075-TP.A-HS	SX-075-TP.A-HF	SX-075-TP.A-HSBK
							70	SX-075-TP.X-HS	SX-075-TP.X-HF	SX-075-TP.X-HSBK
100M	24	10,2	123,5	40	101		70	MX-100-TP.A-HS	MX-100-TP.A-HF	MX-100-TP.A-HSBK
							70	MX-100-TP.X-HS	MX-100-TP.X-HF	MX-100-TP.X-HSBK
100S	32	12,2	131,5	40	107		90	SX-100-TP.A-HS	SX-100-TP.A-HF	SX-100-TP.A-HSBK
							90	SX-100-TP.X-HS	SX-100-TP.X-HF	SX-100-TP.X-HSBK
125M	24	10,2	148,5	43	104		80	MX-125-TP.A-HS	MX-125-TP.A-HF	MX-125-TP.A-HSBK
							80	MX-125-TP.X-HS	MX-125-TP.X-HF	MX-125-TP.X-HSBK
125S	32	12,2	156,5	40	107		100	SX-125-TP.A-HS	SX-125-TP.A-HF	SX-125-TP.A-HSBK
							100	SX-125-TP.X-HS	SX-125-TP.X-HF	SX-125-TP.X-HSBK
150S	32	12,2	181,5	45	112		100	SX-150-TP.A-HS	SX-150-TP.A-HF	SX-150-TP.A-HSBK
							100	SX-150-TP.X-HS	SX-150-TP.X-HF	SX-150-TP.X-HSBK

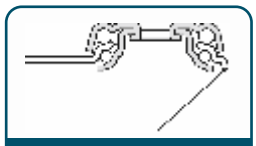

podrška | support
MX-SX
strana.page.11

Za različiti tip fitinga, zamenite -HS od relativnog koda sa otvorom za vijke, sa specifičnim opisom (-BS za stub vijka / FRS za stabljiku / EKS ili ERS za ekspanziju itd.)

Primer:
MX-075-TP.A-HS sa rupom za vijke
MX-075-TP.A-BS (M10Ks20) sa navojem M10Ks20
MX-075-TP.A-ER.S (23/26) sa okruglim proširivačem 23 / 26mm

For each different type of fitting, substitute –HS from the relative code with bolt-hole, with the specific description (-BS for bolt hole / FRS for stem / EQS or ERS for expander etc)

Example:
MX-075-TP.A-HS with bolt-hole
MX-075-TP.A-BS (M10x20) with thread M10x20 mm
MX-075-TP.A-ER.S (23/26) with round expander 23/26 mm

ZABELEŠKE | NOTES

SERIJA SERIES PP

- Polipropilen
- Ležaj osovine:

Biksna [A]

- Polypropylene
- Axle bearing:

plain [A]

					kg	CODE
040L	18	6,2	21		40	WL-040L-P.A06
050L	18	8,2	21		40	WL-050L-P.A08
050M	24	8,2	28		50	WL-050M-P.A08
075M	24	8,2	28		60	WL-075M-P.A08
075S	32	10,2	36		80	WL-075S-P.A10
100M	24	8,2	28		70	WL-100M-P.A08
100S	32	10,2	36		90	WL-100S-P.A10
125M	24	8,2	28		80	WL-125M-P.A08
125S	32	10,2	36		100	WL-125S-P.A10
150S	32	10,2	36		100	WL-150S-P.A10

rodasa

PP SERIJA SERIES

TS

TF

TSBK

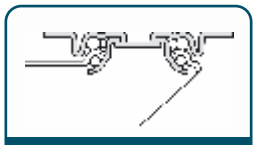

podrška support M-S

strana.page.11

									kg			
040L	18	42x42	30x30	5	63	10	-	=	35	L-040-P.A-TS	L-040-P.A-TF	-
050L	18	42x42	30x30	5	68	10	77	=	35	L-050-P.A-TS	L-050-P.A-TF	L-050-P.A-TSBK
050M	24	60x60	43x43/49x49	6,4	73,5	25	86	=	50	M-050-P.A-TS	M-050-P.A-TF	M-050-P.A-TSBK
075M	24	60x60	43x43/49x49	6,4	101	30,5	91	=	60	M-075-P.A-TS	M-075-P.A-TF	M-075-P.A-TSBK
075S	32	90x70	65x45/75x55	9	109	28	95	=	70	S-075-P.A-TS	S-075-P.A-TF	S-075-P.A-TSBK
100M	24	60x60	43x43/49x49	6,4	123,5	40	101	=	70	M-100-P.A-TS	M-100-P.A-TF	M-100-P.A-TSBK
100S	32	90x70	65x45/75x55	9	131,5	40	107	=	90	S-100-P.A-TS	S-100-P.A-TF	S-100-P.A-TSBK
125M	24	60x60	43x43/49x49	6,4	148,5	43	104	=	80	M-125-P.A-TS	M-125-P.A-TF	M-125-P.A-TSBK
125S	32	90x70	65x45/75x55	9	156,5	40	107	=	100	S-125-P.A-TS	S-125-P.A-TF	S-125-P.A-TSBK
150S	32	90x70	65x45/75x55	6,4	181,5	45	112	=	100	S-150-P.A-TS	S-150-P.A-TF	S-150-P.A-TSBK

roda s a

									kg			
050M	24	60x60	43x43/49x49	6,4	73,5	25	86	=	50	MX-050-P.A-TS	MX-050-P.A-TF	MX-050-P.A-TSBK
075M	24	60x60	43x43/49x49	6,4	101	30,5	91	=	60	MX-075-P.A-TS	MX-075-P.A-TF	MX-075-P.A-TSBK
075S	32	90x70	65x45/75x55	9	109	28	95	=	70	SX-075-P.A-TS	SX-075-P.A-TF	SX-075-P.A-TSBK
100M	24	60x60	43x43/49x49	6,4	123,5	40	101	=	70	MX-100-P.A-TS	MX-100-P.A-TF	MX-100-P.A-TSBK
100S	32	90x70	65x45/75x55	9	131,5	40	107	=	90	SX-100-P.A-TS	SX-100-P.A-TF	SX-100-P.A-TSBK
125M	24	60x60	43x43/49x49	6,4	148,5	43	104	=	80	MX-125-P.A-TS	MX-125-P.A-TF	MX-125-P.A-TSBK
125S	32	90x70	65x45/75x55	9	156,5	40	107	=	100	SX-125-P.A-TS	SX-125-P.A-TF	SX-125-P.A-TSBK
150S	32	90x70	65x45/75x55	6,4	181,5	45	112	=	100	SX-150-P.A-TS	SX-150-P.A-TF	SX-150-P.A-TSBK

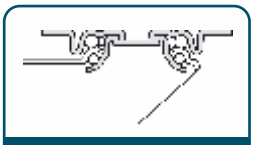

podrška | support

MX-SX

strana.page.11

PP SERIJA SERIES

		BS	EQ	ER	FR	FR-8	FR-II	CD
M	50x24 75x24 100x24 125x24	M08x25 M10x20	21/24x80 24/27x90 27/31x90 31/35x90 35/40x100	19/23x80 23/26x80 26/30x90		8,2x20	11x22	
S	75x32 100x32 125x32 150x32	M10x30 M12x25			28X45 28X50 28X63			65x35/13

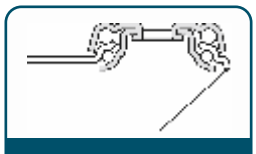

podrška support **M-S**

strana.page.11

							kg			
040L	18	10,2	63	10	-	—	40	L-040-P.A-HS	-	-
050L	18	10,2	68	10	77	—	40	L-050-P.A-HS	-	L-050-P.A-HSBK
050M	24	10,2	73,5	25	86	—	50	M-050-P.A-HS	M-050-P.A-HF	M-050-P.A-HSBK
075M	24	10,2	101	30,5	91	—	60	M-075-P.A-HS	M-075-P.A-HF	M-075-P.A-HSBK
075S	32	12,2	109	28	95	—	70	S-075-P.A-HS	S-075-P.A-HF	S-075-P.A-HSBK
100M	24	10,2	123,5	40	101	—	70	M-100-P.A-HS	M-100-P.A-HF	M-100-P.A-HSBK
100S	32	12,2	131,5	40	107	—	90	S-100-P.A-HS	S-100-P.A-HF	S-100-P.A-HSBK
125M	24	10,2	148,5	43	104	—	80	M-125-P.A-HS	M-125-P.A-HF	M-125-P.A-HSBK
125S	32	12,2	156,5	40	107	—	100	S-125-P.A-HS	S-125-P.A-HF	S-125-P.A-HSBK
150S	32	12,2	181,5	45	112	—	100	S-150-P.A-HS	S-150-P.A-HF	S-150-P.A-HSBK

Za različiti tip fitinga, zamenite -HS od relativnog koda sa otvorom za vijke, sa specifičnim opisom (-BS za stub vijka / FRS za stabljiku / EKS ili ERS za ekspanziju itd.)

Primer:
M-075-P.A-**HS** sa rupom za vijke
M-075-P.A-**BS (M10Ks20)** sa navojem M10Ks20
M-075-P.A-**ER.S (23/26)** sa okruglim proširivačem 23 / 26mm

For each different type of fitting, substitute –HS from the relative code with bolt-hole, with the specific description (-BS for bolt hole / FRS for stem / EQS or ERS for expander etc)

Example:
M-075-P.A-**HS** with bolt-hole
M-075-P.A-**BS (M10x20)** with thread M10x20 mm
M-075-P.A-**ER.S (23/26)** with round expander 23/26 mm

rodasa

BS	EQ	ER	FR	FR-8	FR-II	
M08x25 M10x20	21/24x80 24/27x90 27/31x90 31/35x90 35/40x100	19/23x80 23/26x80 26/30x90		8,2x20	11x22	
M10x30 M12x25			28X45 28X50 28X63			

							kg			
050M	24	10,2	73,5	25	86	=	50	MX-050-P.A-HS	MX-050-P.A-HF	MX-050-P.A-HSBK
075M	24	10,2	101	30,5	91	=	60	MX-075-P.A-HS	MX-075-P.A-HF	MX-075-P.A-HSBK
075S	32	12,2	109	28	95	=	70	SX-075-P.A-HS	SX-075-P.A-HF	SX-075-P.A-HSBK
100M	24	10,2	123,5	40	101	=	70	MX-100-P.A-HS	MX-100-P.A-HF	MX-100-P.A-HSBK
100S	32	12,2	131,5	40	107	=	90	SX-100-P.A-HS	SX-100-P.A-HF	SX-100-P.A-HSBK
125M	24	10,2	148,5	43	104	=	80	MX-125-P.A-HS	MX-125-P.A-HF	MX-125-P.A-HSBK
125S	32	12,2	156,5	40	107	=	100	SX-125-P.A-HS	SX-125-P.A-HF	SX-125-P.A-HSBK
150S	32	12,2	181,5	45	112	=	100	SX-150-P.A-HS	SX-150-P.A-HF	SX-150-P.A-HSBK

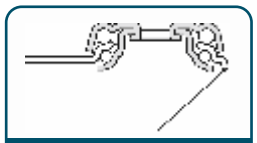

podrška | support
MX-SX

strana.page.11

Za različiti tip fitinga, zamenite -HS od relativnog koda sa otvorom za vijke, sa specifičnim opisom (-BS za stub vijka / FRS za stabljiku / EKS ili ERS za ekspanziju itd.)

Primer:
MX-075-P.A-**HS** sa rupom za vijke
MX-075-P.A-**BS (M10Ks20)** sa navojem M10Ks20
MX-075-P.A-**ER.S (23/26)** sa okruglim proširivačem 23 / 26mm

For each different type of fitting, substitute –HS from the relative code with bolt-hole, with the specific description (-BS for bolt hole / FRS for stem / EQS or ERS for expander etc)

Example:
MX-075-P.A-**HS** with bolt-hole
MX-075-P.A-**BS (M10x20)** with thread M10x20 mm
MX-075-P.A-**ER.S (23/26)** with round expander 23/26 mm

ZABELEŠKE | NOTES

NA

- Najlon 6
- Ležaj osovine:

biksna [A]
kuglični [C]
inoks kuglični [X]

- Nylon 6
- Axle bearing:

plain [A]
ball [C]
inox ball [X]

					kg	CODE
036L	15	6,2	21		35	WL-036L-N.A06
040L	18	6,2	21		40	WL-040L-N.A06
050L	18	8,2	21		40	WL-050L-N.A08
050M	24	8,2	28		50	WL-050M-N.A08
	24	8,2	29		50	WL-050M-NN.C08
075M	24	8,2	28		60	WL-075M-N.A08
	24	8,2	29		60	WL-075M-NN.C08
075S	32	10,2	36		80	WL-075S-N.A10
	32	10,2	37		80	WL-075S-NN.C10
100M	24	8,2	28		70	WL-100M-N.A08
	24	8,2	29		70	WL-100M-NN.C08
100S	32	10,2	36		90	WL-100S-N.A10
	32	10,2	37		90	WL-100S-NN.C10
125M	24	8,2	28		80	WL-125M-N.A08
	24	8,2	29		80	WL-125M-NN.C08
125S	32	10,2	36		100	WL-125S-N.A10
	32	10,2	37		100	WL-125S-NN.C10
150S	32	10,2	36		100	WL-150S-N.A10
	32	10,2	37		100	WL-150S-NN.C10

NA SERIJA SERIES

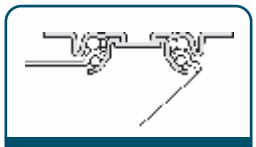

podrška support M-S

strana.page.11

									kg			
036L	15	42x42	30x30	4	51	10	-		35	L-036-N.A-TS	L-036-N.A-TF	-
040L	18	42x42	30x30	5	63	10	-		35	L-040-N.A-TS	L-040-N.A-TF	-
050L	18	42x42	30x30	5	68	10	77		35	L-050-N.A-TS	L-050-N.A-TF	L-050-N.A-TSBK
050M	24	60x60	43x43/49x49	6,4	73,5	25	86		50	M-050-N.A-TS	M-050-N.A-TF	M-050-N.A-TSBK
									50	M-050-NN.C-TS	M-050-NN.C-TF	M-050-NN.C-TSBK
075M	24	60x60	43x43/49x49	6,4	101	30,5	91		60	M-075-N.A-TS	M-075-N.A-TF	M-075-N.A-TSBK
									60	M-075-NN.C-TS	M-075-NN.C-TF	M-075-NN.C-TSBK
075S	32	90x70	65x45/75x55	9	109	28	95		70	S-075-N.A-TS	S-075-N.A-TF	S-075-N.A-TSBK
									70	S-075-NN.C-TS	S-075-NN.C-TF	S-075-NN.C-TSBK
100M	24	60x60	43x43/49x49	6,4	123,5	40	101		70	M-100-N.A-TS	M-100-N.A-TF	M-100-N.A-TSBK
									70	M-100-NN.C-TS	M-100-NN.C-TF	M-100-NN.C-TSBK
100S	32	90x70	65x45/75x55	9	131,5	40	107		90	S-100-N.A-TS	S-100-N.A-TF	S-100-N.A-TSBK
									90	S-100-NN.C-TS	S-100-NN.C-TF	S-100-NN.C-TSBK
125M	24	60x60	43x43/49x49	6,4	148,5	43	104		80	M-125-N.A-TS	M-125-N.A-TF	M-125-N.A-TSBK
									80	M-125-NN.C-TS	M-125-NN.C-TF	M-125-NN.C-TSBK
125S	32	90x70	65x45/75x55	9	156,5	40	107		100	S-125-N.A-TS	S-125-N.A-TF	S-125-N.A-TSBK
									100	S-125-NN.C-TS	S-125-NN.C-TF	S-125-NN.C-TSBK
150S	32	90x70	65x45/75x55	9	181,5	45	112		100	S-150-N.A-TS	S-150-N.A-TF	S-150-N.A-TSBK
									100	S-150-NN.C-TS	S-150-NN.C-TF	S-150-NN.C-TSBK

rodasa

									kg			
050M	24	60x60	43x43/49x49	6,4	73,5	25	86		50	MX-050-N.A-TS	MX-050-N.A-TF	MX-050-N.A-TSBK
									50	MX-050-NN.X-TS	MX-050-NN.X-TF	MX-050-NN.X-TSBK
075M	24	60x60	43x43/49x49	6,4	101	30,5	91		60	MX-075-N.A-TS	MX-075-N.A-TF	MX-075-N.A-TSBK
									60	MX-075-NN.X-TS	MX-075-NN.X-TF	MX-075-NN.X-TSBK
075S	32	90x70	65x45/75x55	9	109	28	95		70	SX-075-N.A-TS	SX-075-N.A-TF	SX-075-N.A-TSBK
									70	SX-075-NN.X-TS	SX-075-NN.X-TF	SX-075-NN.X-TSBK
100M	24	60x60	43x43/49x49	6,4	123,5	40	101		70	MX-100-N.A-TS	MX-100-N.A-TF	MX-100-N.A-TSBK
									70	MX-100-NN.X-TS	MX-100-NN.X-TF	MX-100-NN.X-TSBK
100S	32	90x70	65x45/75x55	9	131,5	40	107		90	SX-100-N.A-TS	SX-100-N.A-TF	SX-100-N.A-TSBK
									90	SX-100-NN.X-TS	SX-100-NN.X-TF	SX-100-NN.X-TSBK
125M	24	60x60	43x43/49x49	6,4	148,5	43	104		80	MX-125-N.A-TS	MX-125-N.A-TF	MX-125-N.A-TSBK
									80	MX-125-NN.X-TS	MX-125-NN.X-TF	MX-125-NN.X-TSBK
125S	32	90x70	65x45/75x55	9	156,5	40	107		100	SX-125-N.A-TS	SX-125-N.A-TF	SX-125-N.A-TSBK
									100	SX-125-NN.X-TS	SX-125-NN.X-TF	SX-125-NN.X-TSBK
150S	32	90x70	65x45/75x55	9	181,5	45	112		100	SX-150-N.A-TS	SX-150-N.A-TF	SX-150-N.A-TSBK
									100	SX-150-NN.X-TS	SX-150-NN.X-TF	SX-150-NN.X-TSBK

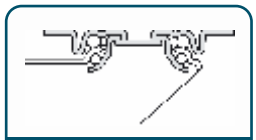

podrška | support

MX-SX

strana.page.11

NA SERIJA SERIES

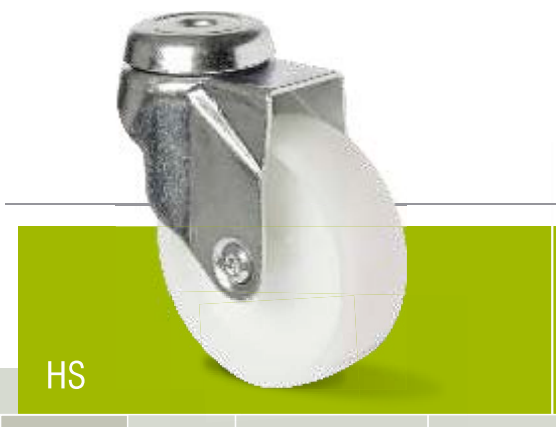

		BS	EQ	ER	FR	FR-8	FR-II	CD
M	50x24 75x24 100x24 125x24	M08x25 M10x20	21/24x80 24/27x90 27/31x90 31/35x90 35/40x100	19/23x80 23/26x80 26/30x90		8,2x20	11x22	
S	75x32 100x32 125x32 150x32	M10x30 M12x25			28X45 28X50 28X63			65x35/13

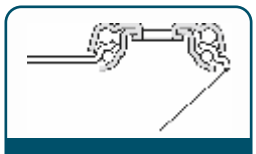

podrška support **M-S**

strana.page.11

							kg			
036L	15	8,2	49	10	-		35	L-036-N.A-HS	-	-
040L	18	10,2	63	10	-		40	L-040-N.A-HS	-	-
050L	18	10,2	68	10	77		40	L-050-N.A-HS	-	L-050-N.A-HSBK
050M	24	10,2	73,5	25	86		50	M-050-N.A-HS	M-050-N.A-HF	M-050-N.A-HSBK
							50	M-050-NN.C-HS	M-050-NN.C-HF	M-050-NN.C-HSBK
075M	24	10,2	101	30,5	91		60	M-075-N.A-HS	M-075-N.A-HF	M-075-N.A-HSBK
							60	M-075-NN.C-HS	M-075-NN.C-HF	M-075-NN.C-HSBK
075S	32	12,2	109	28	95		70	S-075-N.A-HS	S-075-N.A-HF	S-075-N.A-HSBK
							70	S-075-NN.C-HS	S-075-NN.C-HF	S-075-NN.C-HSBK
100M	24	10,2	123,5	40	101		70	M-100-N.A-HS	M-100-N.A-HF	M-100-N.A-HSBK
							70	M-100-NN.C-HS	M-100-NN.C-HF	M-100-NN.C-HSBK
100S	32	12,2	131,5	40	107		90	S-100-N.A-HS	S-100-N.A-HF	S-100-N.A-HSBK
							90	S-100-NN.C-HS	S-100-NN.C-HF	S-100-NN.C-HSBK
125M	24	10,2	148,5	43	104		80	M-125-N.A-HS	M-125-N.A-HF	M-125-N.A-HSBK
							80	M-125-NN.C-HS	M-125-NN.C-HF	M-125-NN.C-HSBK
125S	32	12,2	156,5	40	107		100	S-125-N.A-HS	S-125-N.A-HF	S-125-N.A-HSBK
							100	S-125-NN.C-HS	S-125-NN.C-HF	S-125-NN.C-HSBK
150S	32	12,2	181,5	45	112		100	S-150-N.A-HS	S-150-N.A-HF	S-150-N.A-HSBK
							100	S-150-NN.C-HS	S-150-NN.C-HF	S-150-NN.C-HSBK

Za različiti tip fitinga, zamenite -HS od relativnog koda sa otvorom za vijke, sa specifičnim opisom (-BS za stub vijka / FRS za stabljiku / EKS ili ERS za ekspanziju itd.)

Primer:
M-075-N.A-**HS** sa rupom za vijke
M-075-N.A-**BS (M10Ks20)** sa navojem M10Ks20
M-075-N.A-**ER.S (23/26)** sa okruglim proširivačem 23 / 26mm

For each different type of fitting, substitute –HS from the relative code with bolt-hole, with the specific description (-BS for bolt hole / FRS for stem / EQS or ERS for expander etc)

Example:
M-075-N.A-**HS** with bolt-hole
M-075-N.A-**BS (M10x20)** with thread M10x20 mm
M-075-N.A-**ER.S (23/26)** with round expander 23/26 mm

roda s a

BS	EQ	ER	FR	FR-8	FR-II	
M08x25 M10x20	21/24x80 24/27x90 27/31x90 31/35x90 35/40x100	19/23x80 23/26x80 26/30x90		8,2x20	11x22	
M10x30 M12x25			28X45 28X50 28X63			

							kg			
050M	24	10,2	73,5	25	86		50	MX-050-N.A-HS	MX-050-N.A-HF	MX-050-N.A-HSBK
							50	MX-050-NN.X-HS	MX-050-NN.X-HF	MX-050-NN.X-HSBK
075M	24	10,2	101	30,5	91		60	MX-075-N.A-HS	MX-075-N.A-HF	MX-075-N.A-HSBK
							60	MX-075-NN.X-HS	MX-075-NN.X-HF	MX-075-NN.X-HSBK
075S	32	12,2	109	28	95		70	SX-075-N.A-HS	SX-075-N.A-HF	SX-075-N.A-HSBK
							70	SX-075-NN.X-HS	SX-075-NN.X-HF	SX-075-NN.X-HSBK
100M	24	10,2	123,5	40	101		70	MX-100-N.A-HS	MX-100-N.A-HF	MX-100-N.A-HSBK
							70	MX-100-NN.X-HS	MX-100-NN.X-HF	MX-100-NN.X-HSBK
100S	32	12,2	131,5	40	107		90	SX-100-N.A-HS	SX-100-N.A-HF	SX-100-N.A-HSBK
							90	SX-100-NN.X-HS	SX-100-NN.X-HF	SX-100-NN.X-HSBK
125M	24	10,2	148,5	43	104		80	MX-125-N.A-HS	MX-125-N.A-HF	MX-125-N.A-HSBK
							80	MX-125-NN.X-HS	MX-125-NN.X-HF	MX-125-NN.X-HSBK
125S	32	12,2	156,5	40	107		100	SX-125-N.A-HS	SX-125-N.A-HF	SX-125-N.A-HSBK
							100	SX-125-NN.X-HS	SX-125-NN.X-HF	SX-125-NN.X-HSBK
150S	32	12,2	181,5	45	112		100	SX-150-N.A-HS	SX-150-N.A-HF	SX-150-N.A-HSBK
							100	SX-150-NN.X-HS	SX-150-NN.X-HF	SX-150-NN.X-HSBK

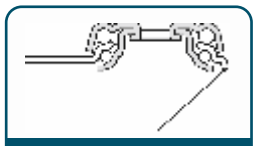

podrška | support
MX-SX
strana.page.11

Za različiti tip fitinga, zamenite -HS od relativnog koda sa otvorom za vijke, sa specifičnim opisom (-BS za stub vijka / FRS za stabljiku / EKS ili ERS za ekspanziju itd.)

Primer:
MX-075-N.A-**HS** sa rupom za vijke
MX-075-N.A-**BS (M10Ks20)** sa navojem M10Ks20
MX-075-N.A-**ER.S (23/26)** sa okruglim proširivačem 23 / 26mm

For each different type of fitting, substitute –HS from the relative code with bolt-hole, with the specific description (-BS for bolt hole / FRS for stem / EQS or ERS for expander etc)

Example:
MX-075-N.A-**HS** with bolt-hole
MX-075-N.A-**BS (M10x20)** with thread M10x20 mm
MX-075-N.A-**ER.S (23/26)** with round expander 23/26 mm

ZABELEŠKE | NOTES

FR

- Polipropilen
- Polypropylene

										kg		
40	37	51	27x27	18x18	5	-	-	-	=	30	FR-40/2-PA-TS27	FR-40/2-PA-TS27-BK
			35x35	26x26	5	-	-	-	=	30	FR-40/2-PA-TS35	FR-40/2-PA-TS35-BK
			42x42	32x32	5	-	-	-	=	30	FR-40/2-PA-TS42	FR-40/2-PA-TS42-BK
			-	-	-	M08x12	-	-	=	30	FR-40/2-PA-BS-M08	FR-40/2-PA-BS-M08-BK
			-	-	-	M10x15	-	-	=	30	FR-40/2-PA-BS-M10	FR-40/2-PA-BS-M10-BK
			-	-	-	-	11x22	-	=	30	FR-40/2-PA-FRS-11	FR-40/2-PA-FRS-11-BK
			-	-	-	-	10x22	-	=	30	FR-40/2-PA-FRS-10	FR-40/2-PA-FRS-10-BK
			-	-	-	-	-	8,2x20	=	30	FR-40/2-PA-IS-08	FR-40/2-PA-IS-08-BK
45	42,5	58	27x27	18x18	5	-	-	-	=	30	FR-45/2-PA-TS27	FR-45/2-PA-TS27-BK
			35x35	26x26	5	-	-	-	=	30	FR-45/2-PA-TS35	FR-45/2-PA-TS35-BK
			42x42	32x32	5	-	-	-	=	30	FR-45/2-PA-TS42	FR-45/2-PA-TS42-BK
			-	-	-	M08x12	-	-	=	30	FR-45/2-PA-BS-M08	FR-45/2-PA-BS-M08-BK
			-	-	-	M10x15	-	-	=	30	FR-45/2-PA-BS-M10	FR-45/2-PA-BS-M10-BK
			-	-	-	-	11x22	-	=	30	FR-45/2-PA-FRS-11	FR-45/2-PA-FRS-11-BK
			-	-	-	-	10x22	-	=	30	FR-45/2-PA-FRS-10	FR-45/2-PA-FRS-10-BK
			-	-	-	-	-	8,2x20	=	30	FR-45/2-PA-IS-08	FR-45/2-PA-IS-08-BK
50	52	62	27x27	18x18	5	-	-	-	=	30	FR-50/2-PA-TS27	FR-50/2-PA-TS27-BK
			35x35	26x26	5	-	-	-	=	30	FR-50/2-PA-TS35	FR-50/2-PA-TS35-BK
			42x42	32x32	5	-	-	-	=	30	FR-50/2-PA-TS42	FR-50/2-PA-TS42-BK
			-	-	-	M08x12	-	-	=	30	FR-50/2-PA-BS-M08	FR-50/2-PA-BS-M08-BK
			-	-	-	M10x15	-	-	=	30	FR-50/2-PA-BS-M10	FR-50/2-PA-BS-M10-BK
			-	-	-	-	11x22	-	=	30	FR-50/2-PA-FRS-11	FR-50/2-PA-FRS-11-BK
			-	-	-	-	10x22	-	=	30	FR-50/2-PA-FRS-10	FR-50/2-PA-FRS-10-BK
			-	-	-	-	-	8,2x20	=	30	FR-50/2-PA-IS-08	FR-50/2-PA-IS-08-BK

MR SERIJA SERIES

- Polipropilen točak sa fiksnim metalnim nosačem
- Ležaj osovine:

  biksna [A]

- Polypropylene wheel with fixed metal support
- Axle bearing:

  plain [A]

							kg	CODE
15	14	30x17	20,3	4,3	18	=	20	MR-015-P.A-TF
25	13	40x18	30	4,3	28	=	40	MR-025-P.A-TF
30	13	45x20	35,3	5,3	34	=	45	MR-030-P.A-TF
45	19	67x24	55	6,3	48	=	50	MR-045-P.A-TF

rodasa

SERIJA
SERIES

HC

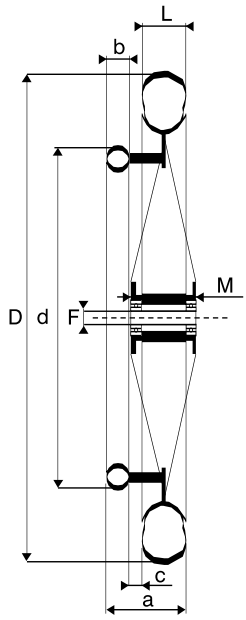

- Pneumatski gumeni ili čvrsti elastični polipropilen
- Steel spoked center
- Ležaj osovine:

biksna [S]

- Pneumatic rubber or solid elastic polyurethane
- Steel spoked center
- Axle bearing:

ball [S]

+80
-15
°C

					a	b	c	d					CODE
20"x1,75	500	45	12	53	80	20	18	420		3,0	1,9	80	WL-500x45-SPN.S12
20"x1-3/8	520	32	12	53	75	20	13	445		3,0	1,8	80	WL-520x32-SPN.S12
22"x1-3/8	560	32	12	53	75	20	13	500		3,5	2,1	80	WL-560x32-SPN.S12
24"x1	600	25	12	53	75	20	13	540		4,0	2,0	80	WL-600x25-SPN.S12
24"x1-3/8	600	32	12	53	75	20	13	540		4,0	2,3	80	WL-600x32-SPN.S12
26"x1-3/8	650	32	12	53	75	20	13	570		4,0	2,5	80	WL-650x32-SPN.S12

rodasa

HC SERIJA SERIES

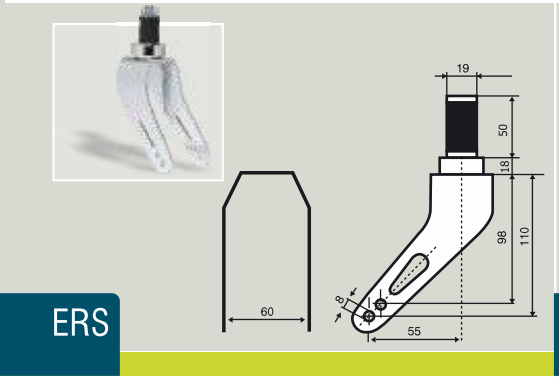

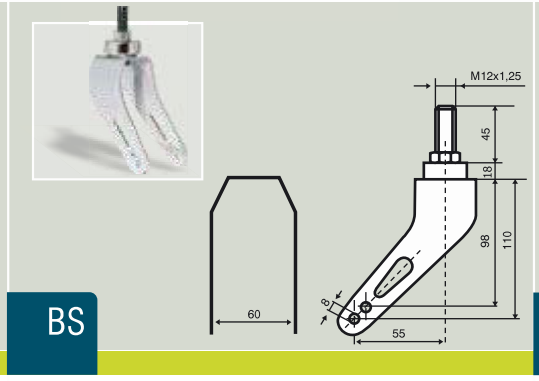

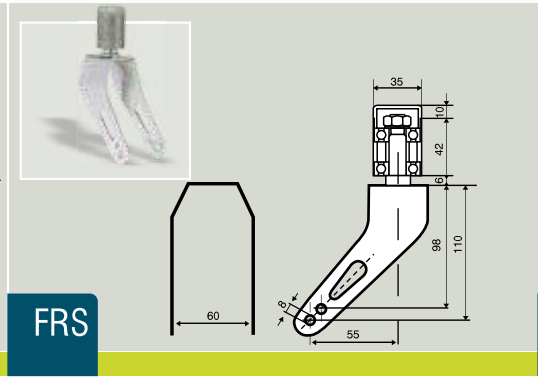

					ERS	BS	FRS		Kg		
175	40	8	60	-	-	-	-		70	WL-175-NPN.S08	-
	40	8	60	215	19x50	-	-		70	-	HC-175-NPN.S-ERS
	40	8	60	215	-	M12x30			70	-	HC-175-NPN.S-BS
	40	8	60	203	-		35x42		70	-	HC-175-NPN.S-FRS
200	50	8	60	-	-	-	-		70	WL-200-NPN.S08	-
	50	8	60	228	19x50	-	-		70	-	HC-200-NPN.S-ERS
	50	8	60	228	-	M12x30	-		70	-	HC-200-NPN.S-BS
	50	8	60	216	-	-	35x42		70	-	HC-200-NPN.S-FRS

roda s a

HC

WL

FRS

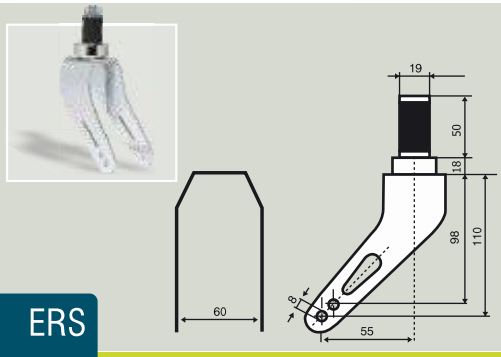

ERS

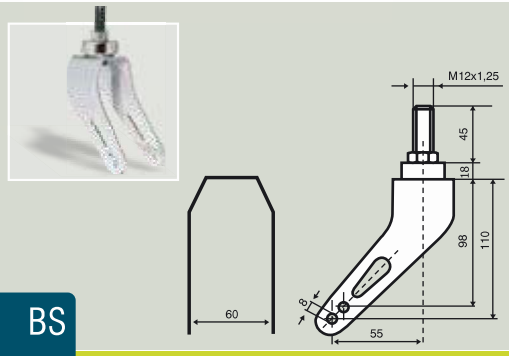

BS

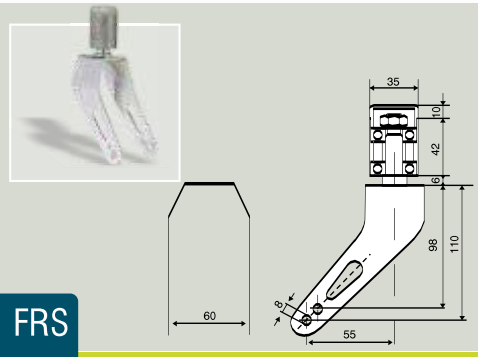

FRS

					ERS	BS	FRS		Kg		
200	50	8	60	-	-	-	-		70	WL-200-NOE.S08	-
	50	8	60	228	19x50	-	-		70	-	HC-200-NOE.S-ERS
	50	8	60	228	-	M12x30	-		70	-	HC-200-NOE.S-BS
	50	8	60	216	-	-	35x42		70	-	HC-200-NOE.S-FRS

ZABELEŠKE | NOTES

SERIJA
SERIES

NSP

- Sintetička guma ili poliuretan
- Polipropilenski centar ili najlon
- Ležaj osovine:
  - biksna [B]
  - kuglični [S]

SPECIJALNA JEDINJENJA:
- Elektroprovodan (NOA)

- Synthetic rubber (NSP) or polyurethane (NO)
- Polypropylene center or nylon
- Axle bearing
  - plain [R]
  - ball [S]

SPECIAL COMPOUNDS
- Electric conductive (NOA)

						CODE
				Sintetička guma | Synthetic rubber		NSP
100	32	12	36		90	WL-100-NSP-B.12
		8			90	WL-100-NSP-S.08
125	32	12	36		100	WL-125-NSP-B.12
		8			100	WL-125-NSP-S.08
150	32	12	36		140	WL-150-NSP-B.12
		8			140	WL-150-NSP-S.08
200	32	8	36		160	WL-200-NSP-S.08
				Poliuretan | Polyurethane		NO
100	32	8	36		150	WL-100-NO-S.08
125	32	8	36		160	WL-125-NO-S.08
150	32	8	36		170	WL-150-NO-S.08
200	32	8	36		180	WL-200-NO-S.08
				Elektroprovodan Poliuretan | Electric Conductive Polyurethane		NOA
100	32	8	36		150	WL-100-NOA-S.08
125	32	8	36		160	WL-125-NOA-S.08
150	32	8	36		170	WL-150-NOA-S.08
200	32	8	36		180	WL-200-NOA-S.08

rodasa

NSP

SERIJA
SERIES

Točkovi za bolničke krevete | Hospital bed castors

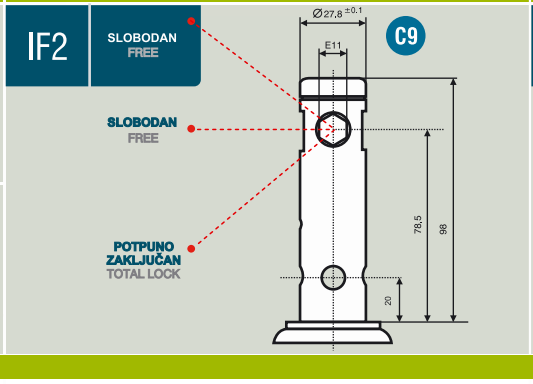

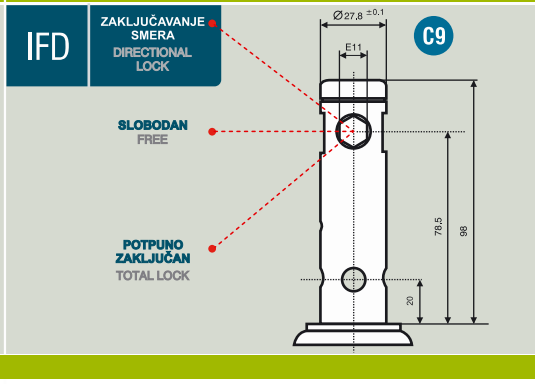

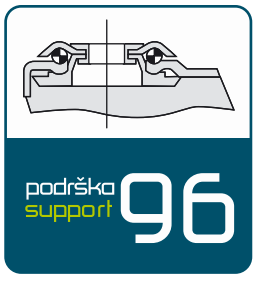

							Kg	IF2 TOTAL LOCK	IFD TOTAL & DIRECTIONAL LOCK
100	32	27,8x96,5	135	44	11		90	96-100-NSP.B-C9.11	96-100-NSP.B-C9.11.D
							90	96-100-NSP.S-C9.11	96-100-NSP.S-C9.11.D
					12		90	96-100-NSP.B-C9.12	96-100-NSP.B-C9.12.D
							90	96-100-NSP.S-C9.12	96-100-NSP.S-C9.12.D
125	32	27,8x96,5	160	45	11		90	96-125-NSP.B-C9.11	96-125-NSP.B-C9.11.D
							90	96-125-NSP.S-C9.11	96-125-NSP.S-C9.11.D
					12		90	96-125-NSP.B-C9.12	96-125-NSP.B-C9.12.D
							90	96-125-NSP.S-C9.12	96-125-NSP.S-C9.12.D

Za poliuretanski točak, zamenite NSP iz relativnog koda, sa NO

Primer: 96-125-**NSP**.S-C9.11 sa gumom od sintetičke gume
96-125-**NO**.S-C9.11 sa poliuretanskom gumom

Za **elektroprovodan**, zamenite NSP iz relativnog koda, pomoću NOA

Primer: 96-125-**NSP**.S-C9.11 sa gumom od sintetičke gume
96-125-**NOA**.S-C9.11 sa električno provodljivim poliuretanskim točkom

For PU wheel, substitute NSP from the relative code, with NO

Example: 96-125-**NSP**.S-C9.11 with synthetic rubber tire
96-125-**NO**.S-C9.11 with PU tire

For **electric conductive,** substitute NSP from the relative code, by NOA.

Example: 96-125-**NSP**.S-C9.11 with synthetic rubber tire
96-125-**NOA**.S-C9.11 with electric conductive PU wheel.

roda s a

SERIJA
SERIES

NSP

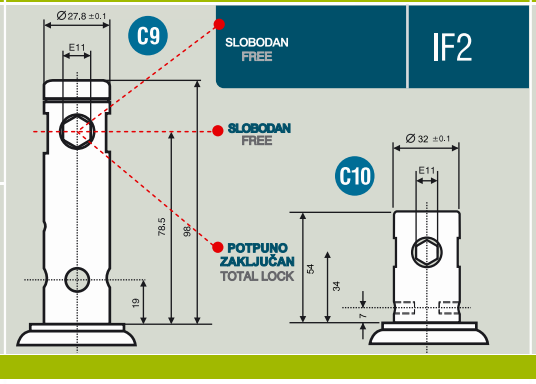

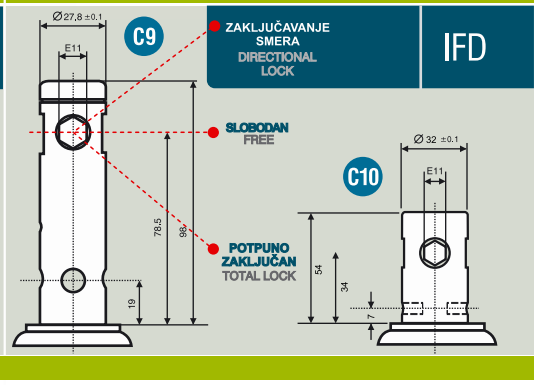

								IF2 TOTAL LOCK	IFD TOTAL & DIRECTIONAL LOCK
100	32	27,8x96,5	150	44	11		100	K6-100-NSP.S-C9.11	K6-100-NSP.S-C9.11.D
					12		100	K6-100-NSP.S-C9.12	K6-100-NSP.S-C9.12.D
		32x54	150	44	11		100	K6-100-NSP.S-C10.11	K6-100-NSP.S-C10.11.D
					12		100	K6-100-NSP.S-C10.12	K6-100-NSP.S-C10.12.D
125	32	27,8x96,5	175	45	11		100	K6-125-NSP.S-C9.11	K6-125-NSP.S-C9.11.D
					12		100	K6-125-NSP.S-C9.12	K6-125-NSP.S-C9.12.D
		32x54	175	45	11		100	K6-125-NSP.S-C10.11	K6-125-NSP.S-C10.11.D
					12		100	K6-125-NSP.S-C10.12	K6-125-NSP.S-C10.12.D
150	32	27,8x96,5	200	51	11		110	K6-150-NSP.S-C9.11	K6-150-NSP.S-C9.11.D
					12		110	K6-150-NSP.S-C9.12	K6-150-NSP.S-C9.12.D
		32x54	200	51	11		110	K6-150-NSP.S-C10.11	K6-150-NSP.S-C10.11.D
					12		110	K6-150-NSP.S-C10.12	K6-150-NSP.S-C10.12.D
200	32	27,8x96,5	250	54	11		120	K6-200-NSP.S-C9.11	K6-200-NSP.S-C9.11.D
					12		120	K6-200-NSP.S-C9.12	K6-200-NSP.S-C9.12.D
		32x54	250	54	11		120	K6-200-NSP.S-C10.11	K6-200-NSP.S-C10.11.D
					12		120	K6-200-NSP.S-C10.12	K6-200-NSP.S-C10.12.D

Za poliuretanski točak, zamenite NSP iz relativnog koda, sa NO

Primer: K6-125-**NSP**.S-C9.11 sa gumom od sintetičke gume
K6-125-**NO**.S-C9.11 sa poliuretanskom gumom

Za **elektroprovodan**, zamenite NSP iz relativnog koda, pomoću NOA

Primer: K6-125-**NSP**.S-C9.11 sa gumom od sintetičke gume
K6-125-**NOA**.S-C9.11 sa električno provodljivim poliuretanskim točkom

For PU wheel, substitute NSP from the relative code, with NO

Example: K6-125-**NSP**.S-C9.11 with synthetic rubber tire
K6-125-**NO**.S-C9.11 with PU tire

For **electric conductive**, substitute NSP from the relative code, by NOA.

Example: K6-125-**NSP**.S-C9.11 with synthetic rubber tire
K6-125-**NOA**.S-C9.11 with electric conductive PU wheel.

NSP

SERIJA
SERIES

Točkovi za bolničke krevete | Hospital bed castors

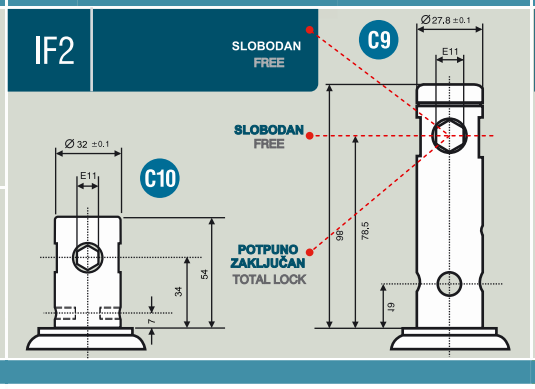

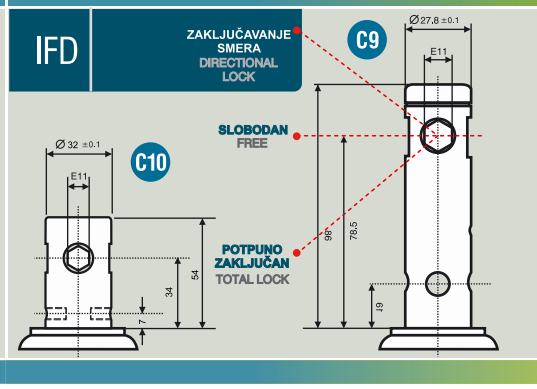

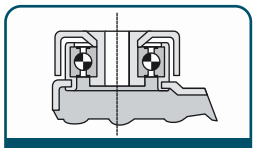

podrška support XK6

								IF2 TOTAL LOCK	IFD TOTAL & DIRECTIONAL LOCK
125	32	27,8x96,5	175	45	11		100	XK6-125-NSP.B-C9.11	XK6-125-NSP.B-C9.11.D
							100	XK6-125-NSP.S-C9.11	XK6-125-NSP.S-C9.11.D
					12		100	XK6-125-NSP.B-C9.12	XK6-125-NSP.B-C9.12.D
							100	XK6-125-NSP.S-C9.12	XK6-125-NSP.S-C9.12.D
		32x54	175	45	11		100	XK6-125-NSP.B-C10.11	XK6-125-NSP.B-C10.11.D
							100	XK6-125-NSP.S-C10.11	XK6-125-NSP.S-C10.11.D
					12		100	XK6-125-NSP.B-C10.12	XK6-125-NSP.B-C10.12.D
							100	XK6-125-NSP.S-C10.12	XK6-125-NSP.S-C10.12.D
150	32	27,8x96,5	200	51	11		120	XK6-150-NSP.B-C9.11	XK6-150-NSP.B-C9.11.D
							120	XK6-150-NSP.S-C9.11	XK6-150-NSP.S-C9.11.D
					12		120	XK6-150-NSP.B-C9.12	XK6-150-NSP.B-C9.12.D
							120	XK6-150-NSP.S-C9.12	XK6-150-NSP.S-C9.12.D
		32x54	200	51	11		120	XK6-150-NSP.B-C10.11	XK6-150-NSP.B-C10.11.D
							120	XK6-150-NSP.S-C10.11	XK6-150-NSP.S-C10.11.D
					12		120	XK6-150-NSP.B-C10.12	XK6-150-NSP.B-C10.12.D
							120	XK6-150-NSP.S-C10.12	XK6-150-NSP.S-C10.12.D
200	32	27,8x96,5	250	54	11		120	XK6-200-NSP.S-C9.11	XK6-200-NSP.S-C9.11.D
					12		120	XK6-200-NSP.S-C9.12	XK6-200-NSP.S-C9.12.D
		32x54	250	54	11		120	XK6-200-NSP.S-C10.11	XK6-200-NSP.S-C10.11.D
					12		120	XK6-200-NSP.S-C10.12	XK6-200-NSP.S-C10.12.D

Za poliuretanski točak, zamenite NSP iz relativnog koda, sa NO

Primer: XK6-125-**NSP**.S-C9.11 sa gumom od sintetičke gume
XK6-125-**NO**.S-C9.11 sa poliuretanskom gumom

Za **elektroprovodan**, zamenite NSP iz relativnog koda, pomoću NOA

Primer: XK6-125-**NSP**.S-C9.11 sa gumom od sintetičke gume
XK6-125-**NOA**.S-C9.11 sa električno provodljivim poliuretanskim točkom

For PU wheel, substitute NSP from the relative code, with NO

Example: XK6-125-**NSP**.S-C9.11 with synthetic rubber tire
XK6-125-**NO**.S-C9.11 with PU tire

For **electric conductive**, substitute NSP from the relative code, by NOA.

Example: XK6-125-**NSP**.S-C9.11 with synthetic rubber tire
XK6-125-**NOA**.S-C9.11 with electric conductive PU wheel.

roda s a

NSP

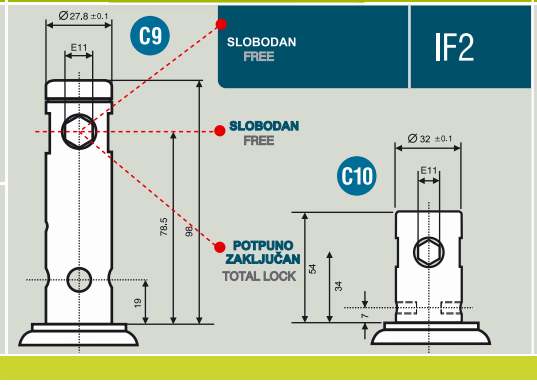

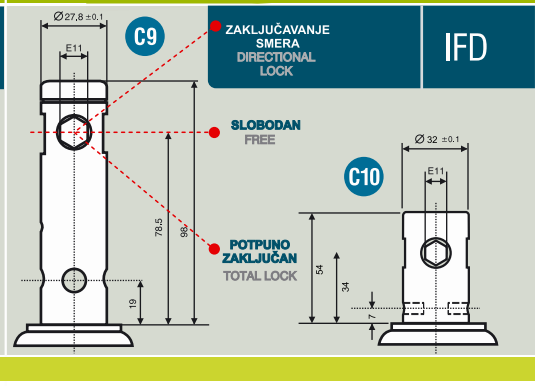

							Kg	FRS FREE SWIVEL	IF2 TOTAL LOCK	IFD TOTAL & DIRECTIONAL LOCK
125	32	27,8x96,5	180	33	11		100	ALU-125-NSP.S-FRS9	ALU-125-NSP.S-C9.11	ALU-125-NSP.S-C9.11.D
					12		100		ALU-125-NSP.S-C9.12	ALU-125-NSP.S-C9.12.D
		32x54	205	33	11		100	ALU-125-NSP.S-FRS10	ALU-125-NSP.S-C10.11	ALU-125-NSP.S-C10.11.D
					12		100		ALU-125-NSP.S-C10.12	ALU-125-NSP.S-C10.12.D
150	32	27,8x96,5	180	37	11		120	ALU-150-NSP.S-FRS9	ALU-150-NSP.S-C9.11	ALU-150-NSP.S-C9.11.D
					12		120		ALU-150-NSP.S-C9.12	ALU-150-NSP.S-C9.12.D
		32x54	205	37	11		120	ALU-150-NSP.S-FRS10	ALU-150-NSP.S-C10.11	ALU-150-NSP.S-C10.11.D
					12		120		ALU-150-NSP.S-C10.12	ALU-150-NSP.S-C10.12.D

Za poliuretanski točak, zamenite NSP iz relativnog koda, sa NO

Primer: ALU-125-**NSP**.S-C9.11 sa gumom od sintetičke gume
ALU-125-**NO**.S-C9.11 sa poliuretanskom gumom

Za **elektroprovodan**, zamenite NSP iz relativnog koda, pomoću NOA

Primer: ALU-125-**NSP**.S-C9.11 sa gumom od sintetičke gume
ALU-125-**NOA**.S-C9.11 sa električno provodljivim poliuretanskim točkom

For PU wheel, substitute NSP from the relative code, with NO

Example: ALU-125-**NSP**.S-C9.11 with synthetic rubber tire
ALU-125-**NO**.S-C9.11 with PU tire

For **electric conductive**, substitute NSP from the relative code, by NOA.

Example: ALU-125-**NSP**.S-C9.11 with synthetic rubber tire
ALU-125-**NOA**.S-C9.11 with electric conductive PU wheel.

NSP

SERIJA
SERIES

Točkovi za bolničke krevete | Hospital bed castors

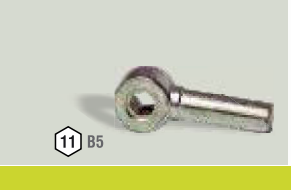

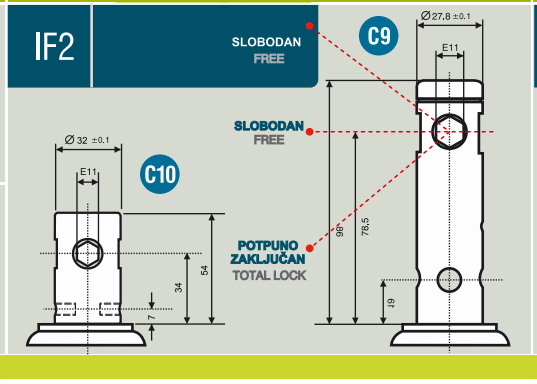

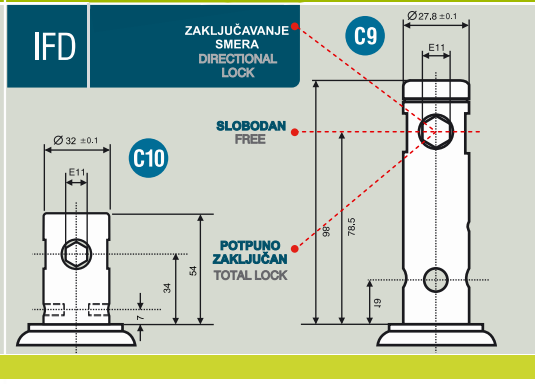

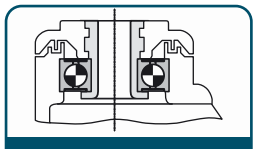

podrška support **H67**

							Kg	FRS FREE SWIVEL	IF2 TOTAL LOCK	IFD TOTAL & DIRECTIONAL LOCK
100	32	27,8x96,5	145	38	11		90	H6-100-NSP.S-FRS9	H6-100-NSP.S-C9.11	H6-100-NSP.S-C9.11.D
					12		90		H6-100-NSP.S-C9.12	H6-100-NSP.S-C9.12.D
		32x54	145	38	11		90	H6-100-NSP.S-FRS10	H6-100-NSP.S-C10.11	H6-100-NSP.S-C10.11.D
					12		90		H6-100-NSP.S-C10.12	H6-100-NSP.S-C10.12.D
125	32	27,8x96,5	165	47	11		100	H6-125-NSP.S-FRS9	H6-125-NSP.S-C9.11	H6-125-NSP.S-C9.11.D
					12		100		H6-125-NSP.S-C9.12	H6-125-NSP.S-C9.12.D
		32x54	165	47	11		100	H6-125-NSP.S-FRS10	H6-125-NSP.S-C10.11	H6-125-NSP.S-C10.11.D
					12		100		H6-125-NSP.S-C10.12	H6-125-NSP.S-C10.12.D
150	32	27,8x96,5	195	49	11		120	H6-150-NSP.S-FRS9	H6-150-NSP.S-C9.11	H6-150-NSP.S-C9.11.D
					12		120		H6-150-NSP.S-C9.12	H6-150-NSP.S-C9.12.D
		32x54	195	49	11		120	H6-150-NSP.S-FRS10	H6-150-NSP.S-C10.11	H6-150-NSP.S-C10.11.D
					12		120		H6-150-NSP.S-C10.12	H6-150-NSP.S-C10.12.D
200	32	27,8x96,5	251	67	11		120	H6-200-NSP.S-FRS9	H6-200-NSP.S-C9.11	H6-200-NSP.S-C9.11.D
					12		120		H6-200-NSP.S-C9.12	H6-200-NSP.S-C9.12.D
		32x54	251	67	11		120	H6-200-NSP.S-FRS10	H6-200-NSP.S-C10.11	H6-200-NSP.S-C10.11.D
					12		120		H6-200-NSP.S-C10.12	H6-200-NSP.S-C10.12.D

Za poliuretanski točak, zamenite NSP iz relativnog koda, sa NO

Primer: H6-125-**NSP**.S-C9.11 sa gumom od sintetičke gume
H6-125-**NO**.S-C9.11 sa poliuretanskom gumom

Za **elektroprovodan**, zamenite NSP iz relativnog koda, pomoću NOA

Primer: H6-125-**NSP**.S-C9.11 sa gumom od sintetičke gume
H6-125-**NOA**.S-C9.11 sa električno provodljivim poliuretanskim točkom

For PU wheel, substitute NSP from the relative code, with NO

Example: H6-125-**NSP**.S-C9.11 with synthetic rubber tire
H6-125-**NO**.S-C9.11 with PU tire

For **electric conductive,** substitute NSP from the relative code, by NOA.

Example: H6-125-**NSP**.S-C9.11 with synthetic rubber tire
H6-125-**NOA**.S-C9.11 with electric conductive PU wheel.

roda s a

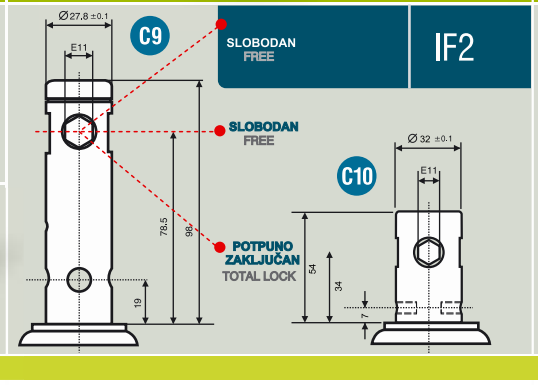

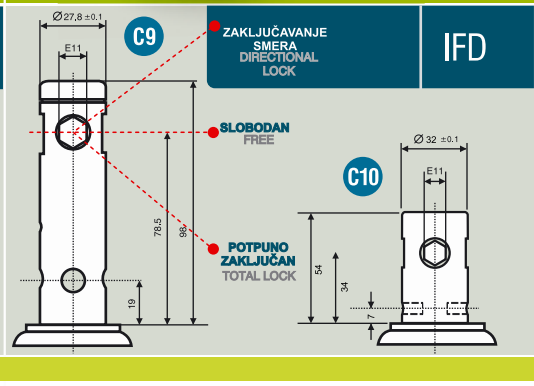

							Kg	FRS FREE SWIVEL	IF2 TOTAL LOCK	IFD TOTAL & DIRECTIONAL LOCK
125	77	27,8x96,5	153	40	11		180	C-125-NO.S-FRS9	C-125-NO.S-C9.11	C-125-NO.S-C9.11.D
		32x54	153	40	11		180	C-125-NO.S-FRS10	C-125-NO.S-C10.11	C-125-NO.S-C10.11.D
150	80	27,8x96,5	179	45	11		250	C-150-NO.S-FRS9	C-150-NO.S-C9.11	C-150-NO.S-C9.11.D
		32x54	179	45	11		250	C-150-NO.S-FRS10	C-150-NO.S-C10.11	C-150-NO.S-C10.11.D

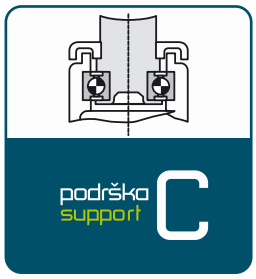

Za **elektroprovodan**, zamenite NO iz relativnog koda, pomoću NOA

Παράδειγμα: C-125-**NO**.S-C9.11 sa PU točkom
C-125-**NOA**.S-C9.11 sa električno provodljivim poliuretanskim točkom

For **electric conductive**, substitute NO from the relative code, by NOA.

Example: C-125-**NO**.S-C9.11 with PU wheel
C-125-**NOA**.S-C9.11 with electric conductive PU wheel.

ZABELEŠKE | NOTES

Utovarni valjci za ručne paletne viljuške
Load rollers for hand pallet trucks

PLXO
- Poliuretan Navoj
- Čelični centar
- Ležaj osovine:
  kuglični [S]

PLN
- Najlon
- Ležaj osovine:
  kuglični [S]

PLXO
- Polyurethane tread
- Steel center
- Axle bearing :
  ball [S]

PLN
- Nylon
- Axle bearing :
  ball [S]

					kg	
70	70	15	70		500	PL-701-XO.S15
80	60	20	60		450	PL-800-XO.S20
	70	20	70		700	PL-801-XO.S20
	80	20	80		800	PL-802-XO.S20
	90	20	90		900	PL-803-XO.S20
	100	20	100		1000	PL-804-XO.S20
82	70	20	70		700	PL-821-XO.S20
	90	20	90		900	PL-823-XO.S20
	100	20	100		1000	PL-824-XO.S20
85	60	20	60		600	PL-850-XO.S20
	70	20	70		700	PL-851-XO.S20
	80	20	80		800	PL-852-XO.S20
	85	20	85		850	PL-852A-XO.S20
	90	20	90		900	PL-853-XO.S20
	100	20	100		1000	PL-854-XO.S20
	110	20	110		1020	PL-855-XO.S20

					kg	
70	70	15	70		600	PL-701-N.S15
80	70	20	70		800	PL-801-N.S20
	100	20	100		1200	PL-804-N.S20
82	70	20	70		700	PL-821-N.S20
	100	20	100		1000	PL-824-N.S20
85	60	20	60		600	PL-850-N.S20
	70	20	70		900	PL-851-N.S20
	85	20	85		1000	PL-852A-N.S20
	90	20	90		1200	PL-853-N.S20
	100	20	100		1500	PL-854-N.S20

Navedene dimenzije su indikativne. Za ostale dostupne dimenzije, zatražite informacije.
The mentioned dimensions are indicative. For other available dimensions please ask for informations.

ZABELEŠKE | NOTES

PLE

Utovarni valjci za ručne paletne viljuške
Load rollers for hand pallet trucks

- Navoj:
  XO Topthane®
  VU Vulkollan®
  DN Dinaroll®
- Čelični centar
- Ležaj osovine:
  kuglični [S]

SPECIJALNA JEDINJENJA:
- **EC** Elektroprovodan

- Tread:
  XO Topthane®
  VU Vulkollan®
  DN Dynaroll®
- Steel center
- Axle bearing
  ball [S]

SPECIAL COMPOUNDS
- **EC** Electric conductive

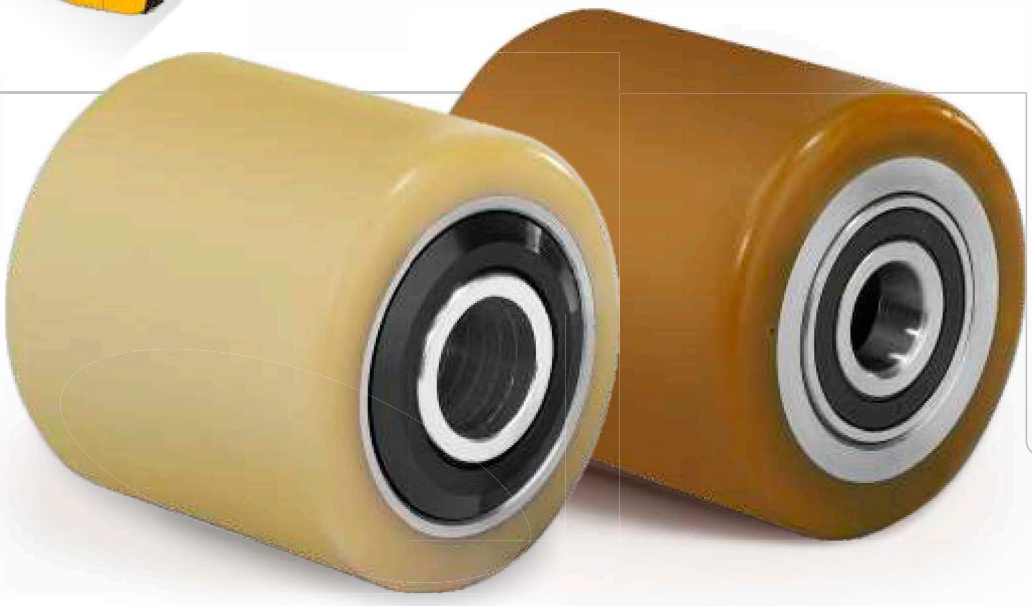

zaptivni tip | sealing type

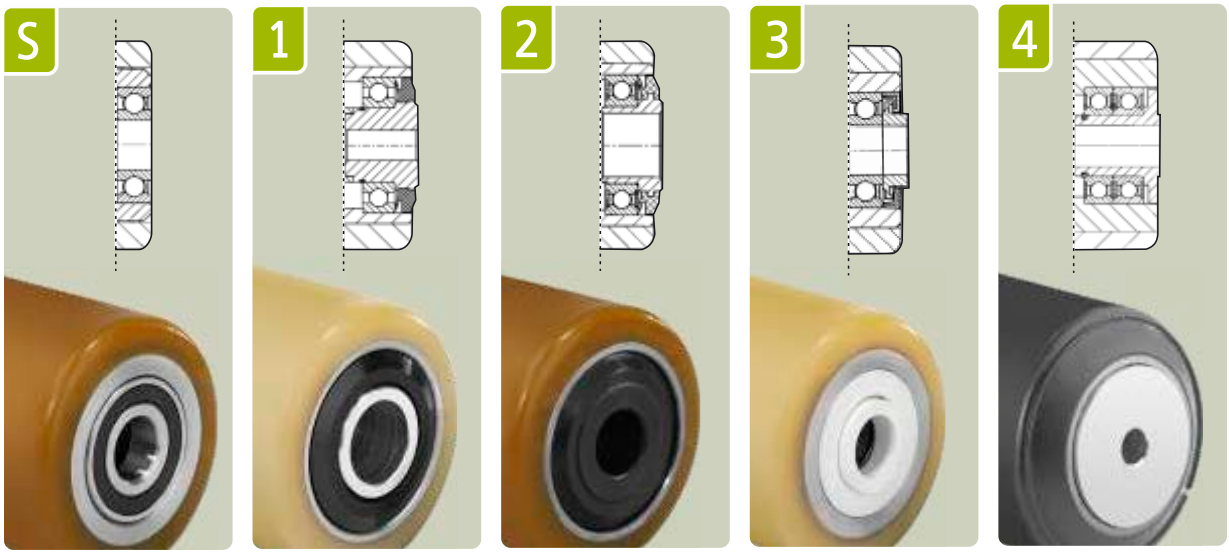

PLE SERIJA SERIES

Utovarni valjci za ručne paletne viljuške | Load rollers for electric pallet trucks

						Materijal Material	kg	Kod Code	Referentni broj Reference No.	Aplikacija Application
80	54	20	60		S	Vulkollan®	400	PL-80x54-VU.S20x60	R-109127	FABA
	55	20	58		S	Vulkollan®	400	PL-80x55-VU.S20x58	R-150814	Bader
	56	20	55		S	Vulkollan®	400	PL-80x56-VU.S20x55	R-147510	Linde
	59,5	20	66		S	Topthane®	440	PL-80x59-XO.S20x66	R-155864	Bader
	70	20	74,8		S	Vulkollan®	500	PL-80x70-VU.S20x74,8	R-139005	Linde
	75	20	79		S	Topthane®	550	PL-80x75-XO.S20x79	R-160476	Bader
82	53	17	55		3	Vulkollan®	350	PL-82x53-VU.317x55	R-134129	Still-Wagner
	60	20	64		S	Vulkollan®	450	PL-82x60-VU.S20x64	R-140535	Crown
	60	20	64,4		2	Vulkollan®	450	PL-82x60-VU.220x64,4	R-171870	Crown
	64	20	64		S	Topthane®	480	PL-82x64-XO.S20x64	R-170606	Jungheinrich
	66	20	71		S	Vulkollan®	480	PL-82x66-VU.S20x71	R-114842	Kahl
	66	20	71		S	Topthane®	480	PL-82x66-XO.S20x71	R-143471	Still-Wagner
	68	20	74		S	Topthane®	500	PL-82x68-XO.S20x74	R-134517	FABA
	69	20	62		S	Topthane®	600	PL-82x69-XO.S20x62	R-147166	Stocklin
	69	20	62		S	Vulkollan®	500	PL-82x69-VU.S20x62	R-152411	Stocklin
	70	20	70		S	Topthane®	500	PL-82x70-XO.S20x70	R-155319	Linde
	70	20	72		S	Topthane®	500	PL-82x70-XO.S20x72	R-152326	Jungheinrich
	70	20	74		S	Topthane®	500	PL-82x70-XO.S20x74	R-167640	MIC
	71	20	71		3	Vulkollan®	540	PL-82x7I-VU.320x71	R-165842	Jungheinrich
	75	20	75		S	Topthane®	570	PL-82x75-XO.S20x75	R-160675	Bader
	78	20	84		S	Topthane®	550	PL-82x78-XO.S20x84	R-155377	FABA
	78	20	84		S	Vulkollan®	580	PL-82x78-VU.S20x84	R-134661	FABA
	82	20	86		S	Vulkollan®	600	PL-82x82-VU.S20x86	R-145844	Crown
	82	20	86,4		2	Vulkollan®	620	PL-82x82-VU.220x86,4	R-171869	Crown
	82	25	82		S	Vulkollan®	600	PL-82x82-VU.S25x82	R-149640	Crown
	89	20	82		S	Topthane®	750	PL-82x89-XO.S20x82	R-147161	Stocklin
	89	20	82		S	Vulkollan®	750	PL-82x89-VU.S20x82	R-152412	Stocklin
	90	20	90		S	Topthane®	675	PL-82x90-XO.S20x90	R-160674	Bader
	91	20	96		S	Topthane®	680	PL-82x91-XO.S20x96.a	R-114843	Linde
							690	PL-82x91-XO.S20x96.b	R-143470	Linde
	98	20	98		S	Topthane®	730	PL-82x98-XO.S20x98	R-170607	Jungheinrich
	100	20	100		S	Topthane®	750	PL-82x100-XO.S20x100	R-155321	BT
	100	20	104		2	Topthane®	750	PL-82x100-XO.220x104	R-158299	Jungheinrich

						Materijal Material	kg	Kod Code	Referentni broj Reference No.	Aplikacija Application
82	100	20	104		S	Vulkollan®	770	PL-82x100-VU.S20x104	R-140537	Crown
	100	20	104,4		2	Vulkollan®	750	PL-82x100-VU.220x104,4	R-171871	Crown
	110	25	116		S	Vulkollan®	800	PL-82x110-VU.S25x116	R-165711	Crown
	110	25	116,2		2	Vulkollan®	950	PL-82x110-VU.225x116,2	R-166959	Crown
85	44	12	48,8		2	Topthane®	340	PL-85x44-XO.212x48,8	R-161675	Jungheinrich
	55	20	60		3	Vulkollan®	490	PL-85x55-VU.320x60	R-154732	Linde
	59,5	17	61,5		3	Vulkollan®	400	PL-85x59-VU.317x61,5	R-131835	Still-Wagner
	59,5	20	59,5		S	Vulkollan®	450	PL-85x59-VU.S20x59,5	R-145220	Jungheinrich
	59,5	20	63,5		2	Vulkollan®	450	PL-85x59-VU.220x63,5	R-148393	Linde
	60	12	65		1	DynaRoll®	450	PL-85x60-DN.112x65	R-175626	Linde
	60	12	65		1	Vulkollan®	460	PL-85x60-VU.S12x65	R-136863	Linde
	60	12	65		2	Vulkollan®	460	PL-85x60-VU.212x65	R-171919	Linde
	60	20	64,8		3	Vulkollan®	450	PL-85x60-VU.320x64,8	R-127722	Linde
	60	20	64,8		S	Vulkollan®	450	PL-85x60-VU.S20x64,8	R-137007	Linde
	60	25	64,8		2	Vulkollan®	450	PL-85x60-VU.225x64,8	R-140498	Jungheinrich
	60	25	64,8		1	DynaRoll®	450	PL-85x60-DN.125x64,8	R-166710	Jungheinrich
	70	12	74,8		2	Topthane®	540	PL-85x70-XO.212x74,8	R-136862	Jungheinrich
	70	20	70		S	Vulkollan®	500	PL-85x70-VU.S20x70	R-109009	MIC
	70	20	74,8		1	Vulkollan®	500	PL-85x70-VU.120x74,8	R-137008	Linde
	75	20	75		S	Vulkollan®	500	PL-85x75-VU.S20x75	R-117061	Genkinger
	75	20	78		S	Topthane®	580	PL-85x75-XO.S20x78	R-162851	BT
	75	20	80		3	Vulkollan®	580	PL-85x75-VU.320x80	R-140091	Linde
	75	20	80		1	Vulkollan®	580	PL-85x75-VU.120x80	R-144532	Atlet
	75	25	80		2	Vulkollan®	580	PL-85x75-VU.225x80	R-140118	Jungheinrich
	78	20	78		S	Topthane®	580	PL-85x78-XO.S20x78	R-140284	Kahl
	78	20	78		S	Vulkollan®	550	PL-85x78-VU.S20x78	R-128606	FABA
	79	25	80		4	Vulkollan®	600	PL-85x79-VU.425x80	R-176378	Jungheinrich
	80	12	85		1	Vulkollan®	600	PL-85x80-VU.112x85	R-136859	Linde
	80	12	85		1	DynaRoll®	430	PL-85x80-DN.112x85	R-173007	Linde
	80	17	82		3	Vulkollan®	610	PL-85x80-VU.317x82	R-131315	Still-Wagner
	80	17	82		4	Vulkollan®	725	PL-85x80-VU.417x82	R-160174	Still-Wagner
	80	20	85		3	Vulkollan®	600	PL-85x80-VU.320x85	R-127723	Jungheinrich
	80	25	84,8		1	Vulkollan®	600	PL-85x80-VU.125x84,8	R-140489	Jungheinrich

PLE SERIJA SERIES

Utovarni valjci za ručne paletne viljuške | Load rollers for electric pallet trucks

						Materijal Material	kg	Kod Code	Referentni broj Reference No.	Aplikacija Application
85	80	25	84,8		2	Vulkollan®	600	PL-85x80-VU.225x84,8	R-142404	Jungheinrich
	80	25	84,8		1	DynaRoll®	600	PL-85x80-DN.125x84,8	R-175348	Jungheinrich
	80	25	85		4	Vulkollan®	700	PL-85x80-VU.425x85	R-172971	Jungheinrich
	82	12	88		4	DynaRoll®	630	PL-85x82-DN.412x88	R-166705	Crown
	84	12	85		4	DynaRoll®	750	PL-85x84-DN.412x85	R-184161	Linde
	84	25	85		4	Vulkollan®	660	PL-85x84-VU.425x85	R-182220	Jungheinrich
	85	12	89,8		1	Vulkollan®	660	PL-85x85-VU.112x89,8	R-152802	Linde
	85	12	89,8		2	DynaRoll®	600	PL-85x85-DN.212x89,8	R-166919	Jungheinrich
	85	25	89,8		2	Vulkollan®	790	PL-85x85-VU.225x89,8	R-155475	Jungheinrich
	86,5	20	86,5		S	Topthane®	600	PL-85x86-XO.S20x86,5	R-100839	Genkinger
	90	20	83		S	Vulkollan®	800	PL-85x90-VU.S20x83	R-171583	Pimespo
	90	20	95		3	Vulkollan®	800	PL-85x90-VU.320x95	R-138890	Linde
	90	25	94,8		1	Vulkollan®	700	PL-85x90-VU.125x94,8	R-169855	Jungheinrich
	95	20	95		S	Topthane®	730	PL-85x95-XO.S20x95	R-160039	Kahl
	95	20	100		1	Vulkollan®	740	PL-85x95-VU.120x100	R-137009	Linde
	95	25	99,8		2	Vulkollan®	730	PL-85x95-VU.225x99,8	R-145019	Jungheinrich
	100	12	101,5		4	DynaRoll®	890	PL-85x100-DN.412x101,5	R-187129	Still-Wagner
	100	12	102		4	DynaRoll®	890	PL-85x100-DN.412x102	R-172468	Jungheinrich
	100	17	102		3	Vulkollan®	700	PL-85x100-VU.317x102	R-134081	Still-Wagner
	100	17	102		4	Vulkollan®	910	PL-85x100-VU.417x102	R-160180	Still-Wagner
	100	17	102		4	DynaRoll®	890	PL-85x100-DN.417x102.a	R-166714	Still-Wagner
							910	PL-85x100-DN.417x102.b	R-175241	Still-Wagner
	100	25	104		S	Vulkollan®	700	PL-85x100-VU.S25x104	R-141865	Still-Wagner
	100	25	104,8		2	Vulkollan®	780	PL-85x100-VU.225x104,8	R-140495	Jungheinrich
	105	12	109,8		1	Vulkollan®	800	PL-85x105-VU.112x109,8	R-136861	Linde
	105	20	110		3	Vulkollan®	800	PL-85x105-VU.320x110	R-169393	Linde
	105	25	110		3	Vulkollan®	810	PL-85x105-VU.325x110	R-127724	Linde
	110	25	114,8		2	Topthane®	850	PL-85x110-XO.225x114,8	R-155328	Jungheinrich
	110	25	114,8		2	Vulkollan®	800	PL-85x110-VU.225x114,8	R-140500	Jungheinrich
	110	25	114,8		1	DynaRoll®	800	PL-85x110-DN.125x114,8	R-174253	Jungheinrich
	2x43	25	89,7		2	Vulkollan®	660	PL-85x2x43-VU.225x89,7	R-171743	Jungheinrich
	2x55	25	114,4		2	Vulkollan®	840	PL-85x2x55-VU.225x114,4	R-167908	Jungheinrich
90	88	12	92		4	Vulkollan®	710	PL-90x88-VU.412x92	R-169969	Jungheinrich
	88	12	92		4	DynaRoll®	710	PL-90x88-DN.412x92	R-166707	Jungheinrich

roda s a

SG

Točak za stabilizaciju električnih paletnih viljuškara
Stabilization castors for electric pallet trucks

- Navoj:
  VU Vulkollan®
  XO Topthane®
- Centar od livenog gvožđa ili čelika
- Ležaj osovine:
  kuglični [S]
- Nosači su okretni, od debelog presovanog čelika i / ili čelika proizvedenog sa ili bez uređaja za podešavanje visine ili apsorpcije udara

- Tread:
  VU Vulkollan®
  XO Topthane®
- Cast iron or Steel center
- Axle bearing :
  Ball [S]
- Supports swivel, from thick pressed steel and/or steel fabricated, with or without height adjusting or shock absorbing device

SG SERIJA SERIES

Točak za stabilizaciju električnih paletnih viljuškara | Stabilization castors for electric pallet trucks

										Materijal Material	kg	Kod Code	Referentni broj Reference No.	Aplikacija Application
	082	34	-	-	-	194	36	20	53x30	Topthane®	250	SG-082x34-AO.S-FRS(53x30)	R-104484	Jungheinrich MIC Lansing
	090	50	-	-	-	136	20	9	25x30,5	Topthane®	400	SG-090x50-XO.S-FRS(25x30,5)	R-146802	Crown
	100	40	110x135	75x85/105	11	168	30	15	-	Topthane®	280	SG-100x40-AO.S-TS(80x105)	R-135585	Genkinger
	100	40	80x110	60x90	11	165	30	15	-	Topthane®	280	SG-100x40-AO.S-TS(60x90)	R-119982	Linde
	100	40	-	-	-	156	36	25	77x55	Topthane®	280	SG-100x40-AO.S-FRS(77x55).a	R-137504	Jungheinrich Still-Wagner
	100	40	-	-	-	156	36	25	77x55	Topthane®	280	SG-100x40-AO.S-FRS(77x55).b	R-145208	Jungheinrich
	100	40	-	-	-	212	33	27	-	Topthane®	280	SG-100x40-AO.S-TSR	R-158138	Jungheinrich
	100	40	-	-	-	141	30	10	60x55	Topthane®	280	SG-100x40-AO.S-FRS(60x55).a	R-124699	Jungheinrich Still-Wagner Stocklin
	100	40	-	-	-	141	30	15	60x55	Topthane®	280	SG-100x40-AO.S-FRS(60x55).b	R-124317	Still-Wagner

										Materijal Material	kg	Kod Code	Referentni broj Reference No.	Aplikacija Application
	100	40	-	-	-	141	30	15	37x30	Topthane®	280	SG-100x40-AO.S-FRS(37x30).a	R-141814	Jungheinrich
	100	40	-	-	-	148	30	22	37x30	Topthane®	280	SG-100x40-AO.S-FRS(37x30).b	R-176143	Jungheinrich
	100	40	-	-	-	141	30	15	53x30	Topthane®	280	SG-100x40-AO.S-FRS(53x30)	R-149415	Jungheinrich
	100	40	-	-	-	126	35	-	139x37	Topthane®	350	SG-100x40-XO.S-FRS(139x37)	R-145668	Jungheinrich MIC
	100	40	-	-	-	160	39	31	113x40	Topthane®	350	SG-100x40-XO.S-FRS(113x40)	R-160189	Jungheinrich MIC
	100	40	-	-	-	150	33	17	80x20	Topthane®	280	SG-100x40-XO.S-FRS(80x20)	R-151020	Linde
	100	40	85x110	60x80	9	170	33	22		Vulkollan®	400	SG-100x40-VU.S-TS(60x80)	R-170359	Stocklin
	100	63	102x115	71,7x83,6	M10	200	51	20		Topthane®	400	SG-100x63-XO.S-TS(71,7x83x6)	R-172490	Yale Hyster
	122	60	-	-	-	173	37	-	29,5x100	Vulkollan®	665	SG-122x40-VU.S-FRS(29,5x100)	R-174685	Pimespo Still-Wagner

SG SERIJA SERIES

Točak za stabilizaciju električnih paletnih viljuškara | Stabilization castors for electric pallet trucks

										Materijal Material	kg	Kod Code	Referentni broj Reference No.	Aplikacija Application
	125	60	110x135	80x105	11	166,5	35,2	-	-	Vulkollan®	450	SG-125x60-VU.S-TS(80x105)	R-172512	Linde
	140	54	120x120	100x100	M12	229	30	-	-	Topthane®	510	SG-140x54-XO.S-TS(100X100)	R-166633	Jungheinrich
	140	60	-	-	-	199	35	-	28x110	Vulkollan®	700	SG-140x60-VU.S-FRS(28x110)	R-168315	Linde
	150	48	-	-	-	218	40	-	49x85	Vulkollan®	670	SG-150x48-VU.S-FRS(49x85)	R-145300	Linde
	150	50	110x135	80x105	M10	200	40	-	-	Topthane®	550	SG-150x50-XOE.S-TS(80x105)	R-185885	Jungheinrich Steinbock
	150	60	-	-	-	220	30	-	87,5x80	Vulkollan®	640	SG-150x60-VU.S-FRS(87,5x80)	R-160925	Crown
	180	65	160x200	130x170	13	245	40	-	-	Vulkollan®	1000	SG-180x65-VU.S-TS(130x170)	R-141214	Genkinger Still-Wagner Linde
	200	50	160x200	130x170	13	270	50	-	-	Topthane®	2000	SG-200x50-XO.S-TS(130x170)	R-146352	Bader
	200	75	205x225	160x210	17	270	50	-	-	Vulkollan®	3000	SG-200x75-VU.S-TS(160x210)	R-158180	BT

rodasa

SW

Nosači točkova za električne paletne viljuške
Support wheels for electric pallet trucks

- Navoj:
  VU Vulkollan®
  XO Topthane®
  DN Dinaroll®
- Liveni čelik ili čelični i/ili ojačani aluminijumski centar
- Ležaj osovine:
  kuglični [S]

SPECIJALNA JEDINJENJA:
- **EC** Elektroprovodan

- Tread:
  VU Vulkollan®
  XO Topthane®
  DN Dynaroll®
- Cast iron or steel fabricated and/or reinforced aluminum center
- Axle bearing :
  Ball [S]

SPECIAL COMPOUNDS
EC Electric conductive

SW SERIJA SERIES

Nosači točkova za električne paletne viljuške | Support wheels for electric pallet trucks

					Materijal Material	kg	Kod Code	Referentni broj Reference No.	Aplikacija Application
082	34	17	34		Topthane®	250	SW-082x34-AO.S17x34	R-104487	Jungheinrich,MIC,Linde
100	40	12	40		Topthane®	350	SW-100x40-AO.S12x40.a	R-100865	Linde
						360	SW-100x40-AO.S12x40.b	R-108245	Still-Wagner
	40	15	40		Topthane®	280	SW-100x40-AO.S15x40	R-114398	Jungheinrich,Linde
	40	15	40		Topthane®	360	SW-100x40-XO.S15x40.a	R-148938	Jungheinrich,Linde
						300	SW-100x40-XO.S15x40.b	R-168553	Linde
	40	20	50		Topthane®	360	SW-100x40-XO.S20x50	R-123375	Jungheinrich
	50	20	54		Topthane®	430	SW-100x50-XO.S20x54	R-139242	Jungheinrich,(Steinbock)
	50	20	60		Topthane®	350	SW-100x50-AO.S20x60	R-134812	FABA.
125	40	20	48		Topthane®	450	SW-125x40-XO.S20x48	R-152466	BT,Jungheinrich,MIC
	40	20	50		Topthane®	350	SW-125x40-AO.S20x50	R-100866	Still-Wagner
	40	25	50		Topthane®	350	SW-125x40-AO.S25x50	R-100867	Linde
	50	12	66		Vulkollan®	500	SW-125x50-VU.S12x66	R-146192	Linde
	50	20	54		Vulkollan®	500	SW-125x50-VU.S20x54	R-145175	BT,Still-Wagner
	50	20	60		Vulkollan®	560	SW-125x50-VU.S20x60	R-139910	Stocklin
	50	20	60		Topthane®	560	SW-125x50-XO.S20x60	R-107000	Stocklin,Still-Wagner
	60	20	62		Vulkollan®	660	SW-125x60-VU.S20x62	R-103756	Jungheinrich,Linde,Fenwick,Still-Wagner
	150	25	144		Vulkollan®	1600	SW-125x150-VU.S25x144	R-151177	Jungheinrich
140	50	20	53,8		Vulkollan®	610	SW-140x50-VU.S20x53,8.a	R-158839	Linde
						670	SW-140x50-VU.S20x53,8.b	R-166933	Linde
	54	20	60		Vulkollan®	600	SW-140x54-VU.S20x60	R-161176	Jungheinrich
	54	20	60		Topthane®	670	SW-140x54-AO.S20x60	R-179945	Jungheinrich
	54	20	60		Topthane®	600	SW-140x54-XO.S20x60	R-124900	Jungheinrich
	60	12	65,8		Vulkollan®	750	SW-140x60-VU.S12x65,8	R-169882	Linde
	60	12	66		Vulkollan®	750	SW-140x60-VU.S12x66	R-153374	Linde,Still-Wagner
	60	15,5	75		Vulkollan®	750	SW-140x60-VU.S15,5x75	R-170287	BT
	60	20	68		Vulkollan®	750	SW-140x60-VU.S20x68	R-138703	BT
	60	20	68		Topthane®	760	SW-140x60-XO.S20x68	R-115253	Stocklin
150	48	12	65		Vulkollan®	660	SW-150x48-VU.S12x65	R-147318	Linde,Fenwick,Lansing
	48	20	60		Vulkollan®	660	SW-150x48-VU.S20x60	R-117057	Rocla/MCFE
	48	25	60		Vulkollan®	650	SW-150x48-VU.S25x60	R-123873	Jungheinrich,Linde,Still-Wagner
	48	20	50		Topthane®	660	SW-150x48-XO.S20x50	R-144484	Jungheinrich,BT,Linde
	48	20	60		Topthane®	660	SW-150x48-XO.S20x60	R-104148	Jungheinrich,Linde
	48	25	60		Topthane®	660	SW-150x48-XO.S25x60	R-107001	Linde

roda s a

					Materijal Material	kg	Kod Code	Referentni broj Reference No.	Aplikacija Application
150	50	20	60		Topthane®	450	SW-150x50-AO.S20x60	R-100868	Sichelschmidt
	54	20	60		Dynaroll®	730	SW-150x54-DN.S20x60	R-168710	Jungheinrich
	54	20	60		Topthane®	700	SW-150x54-XO.S20x60	R-114584	Jungheinrich
	60	25	68		Vulkollan®	780	SW-150x60-VU.S25x68	R-145845	Crown
	60	20	60		Topthane®	800	SW-150x60-XO.S20x60	R-107607	Still-Wagner,Linde
	60	25	60		Topthane®	800	SW-150x60-XO.S25x60	R-107002	Genkinger
	76	25	58		Vulkollan®	950	SW-150x76-VU.S25x58	R-143407	Jungheinrich,Still-Wagner
	79	20	71,5		Topthane®	950	SW-150x79-XO.S20x71,5	R-143300	Stocklin
	100	30	100		Vulkollan®	1300	SW-150x100-VU.S30x100	R-164250	Linde
160	48	20	60		Topthane®	700	SW-160x48-XO.S20x60	R-123748	FABA,Sichelschmidt
	52	20	60		Topthane®	500	SW-160x52-AO.S20x60	R-100869	Jungheinrich,Still-Wagner
180	40	25	40		Topthane®	600	SW-180x40-XO.S25x40	R-152941	Jungheinrich
	50	20	52		Vulkollan®	780	SW-180x50-VU.S20x52	R-158354	BT
	50	25	60		Vulkollan®	770	SW-180x50-VU.S25x60	R-114041	Jungheinrich,Linde
	50	25	60		Topthane®	600	SW-180x50-AO.S25x60	R-100871	Jungheinrich,Linde,Fenwick,Lansing
	50	25	60		Topthane®	800	SW-180x50-XO.S25x60.a	R-123374	Linde
						800	SW-180x50-XO.S25x60.b	R-107731	Jungheinrich
	65	25	75		Vulkollan®	1000	SW-180x65-VU.S25x75	R-107856	Jungheinrich,Linde
200	50	20	50		Vulkollan®	1000	SW-200x50-VU.S20x50	R-142084	Genkinger
	50	25	60		Topthane®	1000	SW-200x50-XO.S25x60	R-107009	BT,Linde
	52	25	60		Topthane®	700	SW-200x52-AO.S25x60	R-100872	Genkinger,Stocklin
	60	25	60		Topthane®	1100	SW-200x60-XO.S25x60	R-107003	Linde
	75	25	80		Vulkollan®	1300	SW-200x75-VU.S25x80	R-135151	Rocla/MCFE
	75	25	75		Topthane®	1350	SW-200x75-XO.S25x75	R-107004	Linde
	80	40	66		Vulkollan®	1077	SW-200x80-VU.S40x66	R-136940	Still-Wagner
	82	25/30	46,5		Topthane®	1300	SW-200x82-XO.S25/30x46,5	R-110103	Jungheinrich
230	50	25	60		Topthane®	800	SW-230x50-AO.S25x60	R-100894	Genkinger
250	50	30	60		Topthane®	1100	SW-250x50-XO.S30x60	R-107005	Genkinger
	60	30	75		Vulkollan®	1350	SW-250x60-VU.S30x75	R-149296	Linde
	75	25	80		Vulkollan®	1550	SW-250x75-VU.S25x80	R-135152	Rocla/MCFE
	75	30	75		Topthane®	1350	SW-250x75-XO.S30x75	R-107007	Still-Wagner

ZABELEŠKE | NOTES

LW

SERIJA
SERIES

Nosači točkova za električne paletne viljuškare | Load wheels for electric pallet trucks

								Materijal Material	kg	Kod Code	Referentni broj Reference No.	Aplikacija Application
125	150	25	-	150	144		-	Vulkollan®	1600	LW-125x150-VU.S25x144	R-151177	Jungheinrich
150	130	25	-	130	136		-	Vulkollan®	2000	LW-150x130-VU.S25x136	R-187376	Jungheinrich
230	98	-	62x44/82x17	69,5	-	-	160	Vulkollan®	1950	LW-230x98-VU.62/82x69,5	R-136302	Linde,Still-Wagner
250	100	-	80x28	100	-	-	-	Vulkollan®	2450	LW-250x100-VU.80x100	R-176147	Hyster/Yale
285	100	-	68x17	62	-	-	200	Vulkollan®	2300	LW-285x100-VU.68x62	R-140038	Linde,Hyster/Yale
	100	-	75x26,75	104,5	-	-	-	Vulkollan®	2250	LW-285x100-VU.75x104,5	R-143370	Jungheinrich,Still-Wagner
	100	40	-	65	42		180	Vulkollan®	2790	LW-285x100-VU.S40x42	R-198526	Jungheinrich
	100	-	72x21,5/68x24,6	74	-	-	200	Vulkollan®	2430	LW-285x100-VU.75/68x74	R-173712	Crown,Jungheinrich
	100	40	-	65	42		180	Vulkollan®	2790	LW-285x100-VU.S40x42	R-170032	Jungheinrich
	100	-	80x28	100	-	-	-	Vulkollan®	2150	LW-285x100-VU.80x100	R-176146	Hyster/Yale
	100	-	75x19/80x20	81	-	-	200	Vulkollan®	2350	LW-285x100-VU.75/80x81	R-176551	Pimespo
300	100	40	-	79	117		200	Vulkollan®	2400	LW-300x100-VU.S40x117	R-158041	Jungheinrich
310	102	-	80x24/80x30	76	-	-	200	Vulkollan®	2500	LW-300x102-VU.80/80x76	R-168050	Still-Wagner
	102	-	80x24	104	-	-	-	Vulkollan®	2300	LW-310x102-VU.80x104	R-168051	Still-Wagner
	102	40/55	-	63	57		200	Vulkollan®	2550	LW-310x102-VU.S40/55x57	R-168336	Still-Wagner
330	100	-	72x19/68x24,6	74,8	-	-	229	Vulkollan®	2650	LW-330x100-VU.72/68x74,8	R-169666	Crown
	100	-	72x21,65/68x24,65	74	-	-	200	Vulkollan®	2650	LW-330x100-VU.72/68x74	R-173635	Crown
343	108	40	-	62	42		180	Vulkollan®	3310	LW-343x100-VU.S40x42	R-170037	Jungheinrich
	140	35	-	140	140		-	Vulkollan®	4450	LW-343x140-VU.S35x140	R-201386	Linde,Magaziner
	146	40	-	56	42		180	Vulkollan®	4170	LW-343x146-VU.S40x56	R-170039	Jungheinrich
350	100	-	80x31/68x15	65	-	-	200	Vulkollan®	3500	LW-350x100-VU.80/68x65	R-150588	Hyster/Yale
	100	-	80x29,5/80x21,5	72	-	-	200	Vulkollan®	3100	LW-350x100-VU.80/80x72	R-176150	Hyster/Yale
	127	-	68x15/80x31	70	-	-	200	Vulkollan®	4100	LW-350x127-VU.68/80x70	R-153465	Hyster/Yale
	125	-	80x29,5/80x29	67,5	-	-	200	Vulkollan®	4000	LW-350x125-VU.80/80x67,5	R-176151	Hyster/Yale
	140	-	80x16/95x34	79	-	-	200	Vulkollan®	3900	LW-350x140-VU.80/95x79	R-160321	Hyster/Yale
	140	-	75x21,5/80x20	105	-	-	200	Vulkollan®	4000	LW-350x140-VU.75/80x105	R-180726	Pimespo
	140	-	80x16/95x33	78	-	-	245	Vulkollan®	4500	LW-350x140-VU.80/95x78	R-185986	Pimespo

LW

Nosači točkova za električne paletne viljuškare
Load wheels for electric pallet trucks

- Navoj:
  XO Topthane®
  VU Vulkollan®
- Centar od livenog gvožđa ili čelika
- Ležaj osovine:
  kuglični [S]
  kućište ležaja

SPECIJALNA JEDINJENJA:
EC Elektroprovodan

- Tread:
  XO Topthane®
  VU Vulkollan®
- Cast iron or steel center
- Axle bearing
  Ball [S]
  - Bearing seat

SPECIAL COMPOUNDS:
EC Electric conductive

SERIJA
SERIES

DW

Pogonski točkovi za električne paletne viljuškare
Drive wheels for electric pallet trucks

- Navoj:
  - **EL** Meka gumena guma
  - **VU** Vulkollan®
  - **XO** Topthane® 92shA
  - **XOE** Topthane® 75shA
- Profil:
  - **FL** Ravni profil
  - **GL** Profil trakcije
- Centar od livenog gvožđa ili čelika
- Tip ugradnje:
  - **F** Flanšna
  - **I** Višenamenska glava zupčanika DIN 6886

SPECIJALNA JEDINJENJA:
- **NM** Ne ostavlja trag
- **EC** Elektroprovodan

- Tread:
  - **EL** Soft elastic rubber tire
  - **VU** Vulkollan®
  - **XO** Topthane® 92shA
  - **XOE** Topthane® 75shA
- Profile:
  - **FL** Flat profile
  - **GL** Traction profile
- Cast iron or steel center
- Fitting type
  - **F** Flange
  - **I** Multi-teeth gear hub DIN 6886

SPECIAL COMPOUNDS
- **NM** Non marking
- **EC** Electric conductive

profil šare | tread profiles

rodasa

DW SERIJA SERIES

Pogonski točkovi za električne paletne viljuškare | Drive wheels for electric pallet trucks

							Materijal Material		kg	Kod Code	Referentni broj Reference No.	Aplikacija Application
200	75	.F	M10	4	10,5	52	Elastic Rubber	FL	350	DW-200x75-EL.F4-FL	R-152184	Jungheinrich,MIC,Manusur
	75	.F	M10	4	10,5	52	Vulkollan®	FL	1100	DW-200x75-VU.F4-FL	R-152183	Jungheinrich,MIC
	80,5	.I	36	-	-	-	Elastic Rubber	FL	300	DW-200x80,5-EL.I-FL	R-158762	Still-Wagner
	80,5	.I	36	-	-	-	Topthane® 92shA	FL	1300	DW-200x80,5-XO.I-FL	R-174395	Still-Wagner
	85	.F	50	4	10,5	72	Elastic Rubber	FL	440	DW-200x85-EL.F4-FL	R-173473	Jungheinrich
	85	.F	50	4	10,5	72	Vulkollan®	FL	1300	DW-200x85-VU.F4-FL	R-138642	Jungheinrich
215	70	.F	60	5	11	92	Elastic Rubber	FL	630	DW-215x70-EL.F5-FL	R-165963	BT
	70	.F	60	5	11	92	Topthane® 75shA	FL	975	DW-215x70-XOE.F5-FL	R-152631	BT
	70	.F	60	5	11	92	Vulkollan®	FL	1300	DW-215x70-VU.F5-FL	R-156385	BT
220	70	.F	30	4	10,5	60	Topthane® 92shA	FL	1500	DW-220x70-XO.F4-FL	R-151616	Hyster/Yale
230	70	.F	45	5	13	70	Elastic Rubber	FL	315	DW-230x70-EL.F5-FL.a	R-176407	Lafis
	70	.F	45	5	13	70	Topthane® 75shA	FL	1000	DW-230x70-XOE.F5-FL.a	R-164010	Lafis
	70	.F	45	5	14	70	Elastic Rubber	FL	315	DW-230x70-EL.F5-FL.b	R-173474	Jungheinrich
	70	.F	45	5	14	70	Topthane® 75shA	FL	1000	DW-230x70-XOE.F5-FL.b	R-161100	MIC,Jungheinrich
	70	.F	45	5	14	70	Topthane® 92shA	FL	1300	DW-230x70-XO.F5-FL.a	R-151048	Jungheinrich
									1300	DW-230x70-XO.F5-FL.b	R-164949	Jungheinrich,Steinbock
	70	.F	45	5	14	70	Vulkollan®	FL	1300	DW-230x70-VU.F5-FL	R-154420	Jungheinrich
	75	.F	45	5	13	70	Elastic Rubber	FL	600	DW-230x75-EL.F5-FL	R-176130	Still-Wagner
	75	.F	45	5	13	70	Elastic Rubber	GL	600	DW-230x75-EL.F5-GL	R-181189	Still-Wagner
	75	.F	45	5	13	70	Vulkollan®	FL	1500	DW-230x75-VU.F5-FL	R-137741	Still-Wagner
	75	.F	80	6	14	112	Topthane® 75shA	FL	1200	DW-230x75-XOE.F6-FL	R-160071	Stocklin
	75	.F	80	6	14	112	Topthane® 92shA	FL	1400	DW-230x75-XO.F6-FL	R-145707	Hyster/Yale
	80	.F	65	4	14	95	Topthane® 75shA	FL	1150	DW-230x80-XOE.F4-FL	R-160395	Jungheinrich,Steinbock
	82	.F	45	5	14	70	Elastic Rubber	FL	530	DW-230x82-EL.F5-FL	R-139724	Jungheinrich
	82	.F	45	5	14	70	Vulkollan®	FL	1500	DW-230x82-VU.F5-FL	R-157132	Jungheinrich
	85	.F	80	6	14	112	Elastic Rubber	FL	700	DW-230x85-EL.F6-FL	R-162525	Hyster/Yale
	90	.F	30	6	13	65	Elastic Rubber	FL	500	DW-230x90-EL.F6-FL	R-143350	Linde

roda s a

							Materijal Material		kg	Kod Code	Referentni broj Reference No.	Aplikacija Application
230	90	.F	30	6	13	65	Vulkollan®	FL	1650	DW-230x90-VU.F6-FL	R-142884	Linde
	90	.F	45	5	13	70	Elastic Rubber	FL	750	DW-230x90-EL.F5-FL	R-153217	Linde
	90	.F	45	5	13	70	Elastic Rubber	GL	750	DW-230x90-EL.F5-GL	R-165616	Linde
	90	.F	45	5	13	70	Topthane® 75shA	FL	1300	DW-230x90-XOE.F5-FL	R-173003	Linde
	90	.F	45	5	13	70	Vulkollan®	FL	1700	DW-230x90-VU.F5-FL	R-153216	Linde
	90	.F	65	4	13	95	Elastic Rubber	FL	750	DW-230x90-EL.F4-FL	R-139674	Linde
	90	.F	65	4	13	95	Elastic Rubber	GL	750	DW-230x90-EL.F4-GL	R-144366	Linde
	90	.F	65	4	13	95	Topthane® 75shA	FL	1250	DW-230x90-XOE.F4-FL	R-173002	Linde
	90	.F	65	4	13	95	Vulkollan®	FL	1650	DW-230x90-VU.F4-FL	R-139675	Linde
233	75	.F	80	6	14	112	Topthane® 75shA	FL	1100	DW-233x75-XOE.F6-FL	R-151990	Hyster/Yale
	85	.F	45	5	12,5	70	Topthane® 92shA	GL	1550	DW-233x85-XO.F5-GL	R-153020	MIC,Jungheinrich
	85	.F	50	4	12,5	80	Elastic Rubber	FL	700	DW-233x85-EL.F4-FL	R-141440	Rocla/MCFE,Jungheinrich,MIC
	85	.F	50	4	12,5	80	Topthane® 92shA	FL	1600	DW-233x85-XO.F4-FL	R-151881	Jungheinrich,Still-Wagner
	85	.F	50	4	12,5	80	Vulkollan®	GL	1600	DW-233x85-VU.F4-GL	R-139540	Rocla/MCFE,Jungheinrich,MIC
245	100	.F	30	6	10,5	62	Topthane® 92shA	FL	1900	DW-245x100-XO.F6-FL	R-148791	Hyster/Yale
250	75	.F	80	5	16	112	Vulkollan®	FL	1450	DW-250x75-VU.F5-FL	R-168483	BT
	80	.F	80	5	18,5	112	Vulkollan®	FL	1600	DW-250x80-VU.F5-FL.a	R-110132	Still-Wagner,Linde
	80	.F	88	5	18,5	120	Vulkollan®	FL	1650	DW-250x80-VU.F5-FL.b	R-149797	Pimespo,Linde
	82	.F	50	4	12,5	80	Elastic Rubber	FL	700	DW-250x82-EL.F4-FL	R-151450	Linde,Pimespo
	82	.F	80	5	18,5	112	Vulkollan®	FL	1700	DW-250x82-VU.F5-FL	R-154005	Atlet
	100	.F	30	6	12,5	95	Elastic Rubber	GL	460	DW-250x100-EL.F6-GL	R-150940	Hyster/Yale
	100	.F	80	5	16	112	Vulkollan®	FL	1900	DW-250x100-VU.F5-FL.a	R-165047	Rocla/MCFE
	100	.F	80	5	18,5	112	Vulkollan®	FL	2100	DW-250x100-VU.F5-FL.b	R-158281	Still-Wagner
	105	.F	80	5	18,5	112	Elastic Rubber	FL	850	DW-250x105-EL.F5-FL	R-103109	Linde,Still-Wagner
	105	.F	80	5	18,5	112	Vulkollan®	FL	2100	DW-250x105-VU.F5-FL	R-113019	Linde,Still-Wagner
254	82	.F	80	5	18,5	112	Topthane® 75shA	FL	1450	DW-254x82-XOE.F5-FL	R-155900	Stocklin
	82	.F	80	5	18,5	112	Vulkollan®	FL	1450	DW-254x82-VU.F5-FL	R-138686	Stocklin

DW SERIJA SERIES

Pogonski točkovi za električne paletne viljuškare | Drive wheels for electric pallet trucks

							Materijal Material		kg	Kod Code	Referentni broj Reference No.	Aplikacija Application
254	100	.F	80	5	18,5	112	Vulkollan®	FL	2100	DW-254x100-VU.F5-FL.a	R-148259	Ormic,Genkinger
									2400	DW-254x100-VU.F5-FL.b	R-151050	Linde
	102	.F	80	5	18	112	Elastic Rubber	FL	800	DW-254x102-EL.F5-FL	R-165106	Linde
	102	.F	80	5	18	112	Vulkollan®	FL	2010	DW-254x102-VU.F5-FL	R-163379	Linde
260	80	.F	173	6	9	188	Elastic Rubber	FL	260	DW-260x80-EL.F6-FL	R-173475	Jungheinrich
	100	.F	173	6	9	188	Vulkollan®	FL	2275	DW-260x100-VU.F6-FL	R-127183	Jungheinrich
270	105	.F	173	6	9	188	Elastic Rubber	FL	680	DW-270x105-EL.F6-FL	R-150138	Jungheinrich
300	100	.F	80	5	18,5	112	Vulkollan®	FL	2200	DW-300x100-VU.F5-FL.a	R-147088	Still-Wagner
									2160	DW-300x100-VU.F5-FL.b	R-169822	Still-Wagner
	100	-	230	-	-	-	Elastic Rubber	FL	890	DW-300x100-EL-FL	R-153833	BT
	100	-	230	-	-	-	Vulkollan®	FL	2500	DW-300x100-VU-FL	R-153839	BT
	130	.F	80	5	18,5	112	Vulkollan®	FL	3100	DW-300x130-VU.F5-FL	R-162776	Still-Wagner
310	105	.F	80	5	16	112	Vulkollan®	FL	2600	DW-310x105-VU.F5-FL.a	R-152449	BT
	105	.F	80	5	18,5	112	Vulkollan®	FL	2600	DW-310x105-VU.F5-FL.b	R-152565	Jungheinrich,Steinbock
	120	.F	80	7	16	112	Vulkollan®	FL	3000	DW-310x120-VU.F7-FL	R-166402	BT
313	125	.F	80	5	18,5	112	Vulkollan®	FL	3100	DW-313x125-VU.F5-FL.a	R-153047	ICEM,Linde
									3050	DW-313x125-VU.F5-FL.b	R-176575	Still-Wagner
330	135	.F	80	7	14,5	112	Vulkollan®	FL	3300	DW-330x135-VU.F7-FL	R-143107	Jungheinrich,Pimespo,Linde
343	114	.F	80	7	18,5	112	Vulkollan®	FL	3500	DW-343x114-VU.F7-FL	R-156268	Jungheinrich,MIC
	135	.F	80	7	15,5	112	Vulkollan®	FL	3600	DW-343x135-VU.F7-FL	R-190071	Linde
	136	.F	80	7	18,5	112	Elastic Rubber	FL	1000	DW-343x136-EL.F7-FL	R-176334	Jungheinrich,Steinbock
	140	.F	80	7	14,5	112	Vulkollan®	FL	3750	DW-343x140-VU.F7-FL.a	R-179648	Hyster/Yale
	140	.F	80	7	18,5	112	Vulkollan®	FL	3750	DW-343x140-VU.F7-FL.b	R-156262	Jungheinrich,Crown
350	125	.F	80	7	16	112	Vulkollan®	FL	3600	DW-350x125-VU.F7-FL	R-163816	BT

rodasa

SERIJA
SERIES

STV

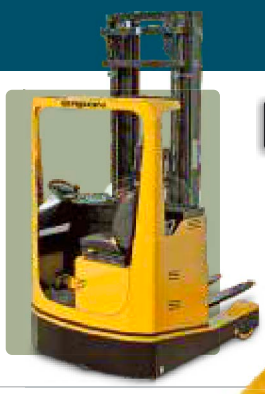

Gume od poliuretanskog čelika za električne paletne viljuškare
PU steel band tyres for power pallet trucks

- Navoj:
  VU Vulkollan®
  XO Topthane®
- Profil:
  FL Ravan
  GL Traction
- Fitting prsten :
  St-Z Ravni cilindrični čelični pojas
  Dg-z Ploska cilindrična žičana mreža
  Dg-Km Konusna simetrična žičana mreža
  Dg-Ks Konusna asimetrična žičana mreža

SPECIJALNA JEDINJENJA:
EC Elektroprovodan

- Tread:
  VU Vulkollan®
  XO Topthane®
- Profile:
  FL Flat
  GL Traction
- Fitting ring:
  ST-z Flat cylindrical steel band
  DG-z Flat Cylindrical wire mesh
  DG-km Conical symmetric wire mesh
  DG-ks Conical asymmetric wire mesh

SPECIAL COMPOUNDS
EC Electric conductive

montažne baze | mounting bases

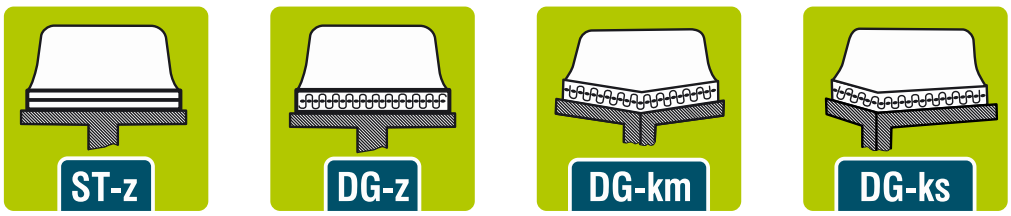

profil šare | tread profiles

rodasa

Gume od poliuretanskog čelika za električne paletne viljuškare
PU steel band tyres for power pallet trucks

			Fitting		kg	CODE
125	40	75	ST-z	FL	430	ST-125/40-75 VU.Z-FL
	50	75	ST-z	FL	530	ST-125/50-75 VU.Z-FL
150	50	100	ST-z	FL	650	ST-150/50-100 VU.Z-FL
	75	80	ST-z	FL	900	ST-150/75-80 VU.Z-FL
	75	100	ST-z	FL	950	ST-150/75-100 VU.Z-FL
	130	100	ST-z	FL	1700	ST-150/130-100 VU.Z-FL
160	50	100	ST-z	FL	660	ST-160/50-100 VU.Z-FL
180	50	120	ST-z	FL	750	ST-180/50-120 VU.Z-FL
	75	120	ST-z	FL	1100	ST-180/75-120 VU.Z-FL
	100	105	ST-z	FL	1400	ST-180/100-105 VU.Z-FL
200	50	140	ST-z	FL	800	ST-200/50-140 VU.Z-FL
	60	150	ST-z	FL	1000	ST-200/60-150 VU.Z-FL
	75	100	ST-z	FL	1040	ST-200/75-100 VU.Z-FL
	80	120	ST-z	FL	1250	ST-200/80-120 VU.Z-FL
	105	120	ST-z	FL	1600	ST-200/105-120 VU.Z-FL
230	100	140	ST-z	FL	1750	ST-230/100-140 VU.Z-FL
250	50	190	ST-z	FL	1000	ST-250/50-190 VU.Z-FL
	60	190	ST-z	FL	1250	ST-250/60-190 VU.Z-FL
	80	170	ST-z	FL	1600	ST-250/80-170 VU.Z-FL
	100	170	ST-z	FL	1950	ST-250/100-170 VU.Z-FL
	105	170	ST-z	FL	2000	ST-250/105-170 VU.Z-FL
	130	140	ST-z	FL	2300	ST-250/130-140 VU.Z-FL
254	120	190	ST-z	FL	2500	ST-254/120-190 VU.Z-FL
260	85	170	ST-z	FL	1650	ST-260/85-170 VU.Z-FL
265	85	190	ST-z	FL	1900	ST-265/85-190 VU.Z-FL
285	75	220	ST-z	FL	1800	ST-285/75-220 VU.Z-FL
	100	200	ST-z	FL	2200	ST-285/100-200 VU.Z-FL
	100	220	ST-z	FL	2370	ST-285/100-220 VU.Z-FL
	100	228	ST-z	FL	2400	ST-285/100-228 VU.Z-FL
290	105	185	ST-z	FL	2150	ST-290/105-185 VU.Z-FL
300	70	239	ST-z	FL	1750	ST-300/70-239 VU.Z-FL
	90	203	ST-z	FL	2000	ST-300/90-203 VU.Z-FL
	100	203	ST-z	FL	2105	ST-300/100-203 VU.Z-FL
310	120	203	ST-z	FL	2600	ST-310/120-203 VU.Z-FL
	120	220	ST-z	FL	2870	ST-310/120-220 VU.Z-FL
315	85	247	ST-z	FL	2200	ST-315/85-247 VU.Z-FL
343	114	225	ST-z	FL	2730	ST-343/114-225 VU.Z-FL
	114	245	ST-z	FL	3000	ST-343/114-245 VU.Z-FL
	140	245	ST-z	FL	3600	ST-343/140-245 VU.Z-FL
	140	270	ST-z	FL	3900	ST-343/140-270 VU.Z-FL
345	140	270	ST-z	FL	3940	ST-345/140-270 VU.Z-FL
350	90	280	ST-z	FL	2570	ST-350/90-280 VU.Z-FL
	100	280	ST-z	FL	2850	ST-350/100-280 VU.Z-FL
	110	270	ST-z	FL	3100	ST-350/110-270 VU.Z-FL
	127	270	ST-z	FL	3500	ST-350/127-270 VU.Z-FL
	140	270	ST-z	FL	4500	ST-350/140-270 VU.Z-FL
405	130	305	ST-z	FL	3900	ST-405/130-305 VU.Z-FL
	145	290	ST-z	FL	4150	ST-405/145-290 VU.Z-FL
	180	305	ST-z	FL	5440	ST-405/180-305 VU.Z-FL
415	75	305	ST-z	FL	2080	ST-415/75-305 VU.Z-FL

Navedene dimenzije su indikativne. Za ostale dostupne dimenzije, zatražite informacije.
The mentioned dimensions are indicative. For other available dimensions please ask for informations.

STE

Gumene elastične gume za energetske paletne viljuške
Steel band elastic tyres for power pallet trucks

- Mekana gumena gumica na sebi:
  - **FL** Ravan profil
  - **GL** Profil trakcije
  - **GS** Profil riblje kosti
- Fitting prsten:
  - **ST-z** Ravni cilindrični čelični pojas
  - **DG-z** Ploska cilindrična žičana mreža
  - **DG-km** Konusna simetrična žičana mreža
  - **DG-ks** Konusna asimetrična žičana mreža

SPECIJALNA JEDINJENJA:
- **NM** Electric conductive
- **EC** Ne ostavlja trag

- Soft elastic rubber tire:
  - **FL** Flat profile
  - **GL** Traction profile
  - **GS** Fish-bone profile
- Fitting ring:
  - **ST-z** Flat cylindrical steel band
  - **DG-z** Flat Cylindrical wire mesh
  - **DG-km** Conical symmetric wire mesh
  - **DG-ks** Conical asymmetric wire mesh

SPECIAL COMPOUNDS
- **NM** Non marking
- **EC** Electric conductive

montažne baze | mounting bases

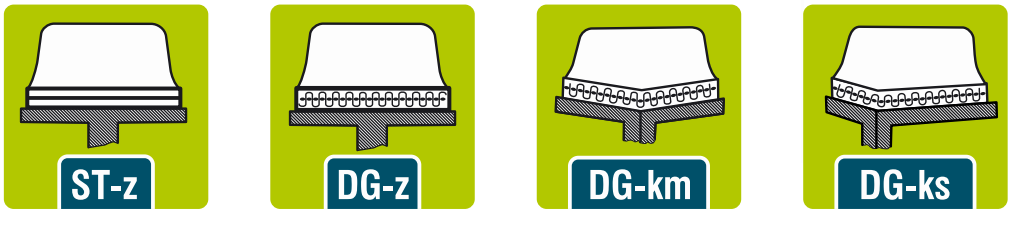

profil šare | tread profiles

rodasa

STE TOČAK WHEEL

Gumene elastične gume za energetske paletne viljuške
Steel band elastic tyres for power pallet trucks

			Fitting		kg	Code
125	50	75	DG-z	FL	225	DG-125/50-75 EL.Z-FL
150	50	100	DG-z	FL	250	DG-150/50-100 EL.Z-FL
	50	100	ST-z	FL	225	ST-150/50-100 EL.Z-FL
	75	100	ST-z	FL	375	ST-150/75-100 EL.Z-FL
160	50	100	DG-z	FL	300	DG-160/50-100 EL.Z-FL
	50	100	ST-z	FL	250	ST-160/50-100 EL.Z-FL
180	75	120	ST-z	FL	475	ST-180/75-120 EL.Z-FL
200	50	140	ST-z	FL	350	ST-200/50-140 EL.Z-FL
	75	100	ST-z	FL	500	ST-200/75-100 EL.Z-FL
	85	105	ST-z	FL	550	ST-200/85-105 EL.Z-FL
	130	105	ST-z	FL	880	ST-200/130-105 EL.Z-FL
220	50	170	ST-z	FL	400	ST-230/50-170 EL.Z-FL
	60	160	ST-z	FL	450	ST-220/60-160 EL.Z-FL
	75	170	ST-z	FL	625	ST-230/75-170 EL.Z-FL
250	50	190	ST-z	FL	450	ST-250/50-190 EL.Z-FL
	60	170	ST-z	FL	450	ST-250/60-170 EL.Z-FL
	60	190	DG-z	FL	525	DG-250/60-190 EL.Z-FL
	75	140	ST-z	FL	625	ST-250/75-140 EL.Z-FL
	80	170	ST-z	FL	675	ST-250/80-170 EL.Z-FL
	85	190	ST-z	FL	745	ST-250/85-190 EL.Z-FL
	90	150	ST-z	FL	670	ST-250/90-150 EL.Z-FL
	105	170	ST-z	FL	845	ST-250/105-170 EL.Z-FL
	130	140	ST-z	FL	975	ST-250/130-140 EL.Z-FL
	130	140	ST-z	GS	975	ST-250/130-140 EL.Z-GS
254	90	145	ST-z	FL	670	ST-254/90-145 EL.Z-FL
260	85	170	ST-z	FL	775	ST-260/85-170 EL.Z-FL
	85	170	ST-z	GL	775	ST-260/85-170 EL.Z-GL
	105	170	ST-z	FL	825	ST-260/105-170 EL.Z-FL
	105	170	ST-z	GS	825	ST-260/105-170 EL.Z-GS
	130	170	ST-z	FL	1065	ST-260/130-170 EL.Z-FL
285	75	220	ST-z	FL	725	ST-285/75-220 EL.Z-FL
300	75	220	DG-z	FL	750	DG-300/75-220 EL.Z-FL
	75	240	ST-z	FL	750	ST-300/75-240 EL.Z-FL
	85	170	ST-z	FL	800	ST-300/85-170 EL.Z-FL
	90	203	ST-z	FL	900	ST-300/90-203 EL.Z-FL
	100	203	ST-z	FL	975	ST-300/100-203 EL.Z-FL
	100	203	ST-z	GS	870	ST-300/100-203 EL.Z-GS
	100	230	ST-z	FL	890	ST-300/100-230 EL.Z-FL
305	75	240	ST-z	FL	700	ST-305/75-240 EL.Z-FL
310	60	220	ST-z	FL	650	ST-310/60-220 EL.Z-FL
313	130	203	ST-z	FL	1280	ST-313/130-203 EL.Z-FL
	130	203	ST-z	GS	1280	ST-313/130-203 EL.Z-GS
330	114	203	ST-z	FL	1120	ST-330/114-203,2 EL.Z-FL
343	140	203	ST-z	FL	1510	ST-343/140-203,2 EL.Z-FL
360	60	270	ST-z	FL	750	ST-360/60-270 EL.Z-FL
	75	270	ST-z	FL	950	ST-360/75-270 EL.Z-FL
	85	270	ST-z	FL	1050	ST-360/85-270 EL.Z-FL
381	152	285,8	ST-z	FL	1715	ST-381/152-285,8 EL.Z-FL
400	75	305	DG-z	FL	1000	DG-400/75-305 EL.Z-FL
405	85	305	ST-z	FL	900	ST-405/85-305 EL.Z-FL
	130	305	ST-z	FL	1510	ST-405/130-305 EL.Z-FL
	130	305	ST-z	GS	1510	ST-405/130-305 EL.Z-GS
	260	305	ST-z	FL	3325	ST-405/260-305 EL.Z-FL
406	127	266,7	ST-z	FL	1510	ST-406/127-266,7 EL.Z-FL
	152	266,7	ST-z	FL	1910	ST-406/152-266,7 EL.Z-FL

rodasa

			Fitting		kg	Code
413	152	285,8	ST-z	FL	1920	ST-413/152-285,8 EL.Z-FL
415	75	305	ST-z	FL	1000	ST-415/75-305 EL.Z-FL
	90	305	ST-z	FL	1060	ST-415/90-305 EL.Z-FL
	100	305	ST-z	FL	1115	ST-415/100-305 EL.Z-FL
425	150	305	ST-z	FL	1800	ST-425/150-305 EL.Z-FL
	260	305	ST-z	FL	3625	ST-425/260-305 EL.Z-FL
	300	305	ST-z	FL	4245	ST-425/300-305 EL.Z-FL
440	200	330	ST-z	FL	2710	ST-440/200-330 EL.Z-FL
450	120	300	ST-z	FL	1500	ST-450/120-300 EL.Z-FL
	260	305	ST-z	FL	3620	ST-450/260-305 EL.Z-FL
	300	305	ST-z	FL	4265	ST-450/300-305 EL.Z-FL
457	127	308	ST-z	FL	1640	ST-457/127-308 EL.Z-FL
	229	308	ST-z	FL	3450	ST-457/229-308 EL.Z-FL
500	85	370	ST-z	FL	1270	ST-500/85-370 EL.Z-FL
	100	370	ST-z	FL	1300	ST-500/100-370 EL.Z-FL
	140	370	ST-z	FL	1995	ST-500/140-370 EL.Z-FL
	280	370	ST-z	FL	4535	ST-500/280-370 EL.Z-FL
520	120	370	ST-z	FL	1670	ST-520/120-370 EL.Z-FL
533	203	381	ST-z	FL	3375	ST-533/203-381 EL.Z-FL
550	120	410	ST-z	FL	1750	ST-550/120-410 EL.Z-FL
	160	410	ST-z	FL	2250	ST-550/160-410 EL.Z-FL
610	100	410	ST-z	FL	1265	ST-610/100-410 EL.Z-FL
	150	410	ST-z	FL	2505	ST-610/150-410 EL.Z-FL
620	200	410	ST-z	FL	3790	ST-620/200-410 EL.Z-FL
630	180	410	ST-z	FL	3300	ST-630/180-410 EL.Z-FL
645	200	480	ST-z	FL	3865	ST-645/200-480 EL.Z-FL
	250	410	ST-z	FL	4810	ST-645/250-410 EL.Z-FL
	300	410	ST-z	FL	6060	ST-645/300-410 EL.Z-FL
	350	410	ST-z	FL	7310	ST-645/350-410 EL.Z-FL
660	203	480	ST-z	GL	3700	ST-660/203-480 EL.Z-GL
	250	480	ST-z	GL	4785	ST-660/250-480 EL.Z-GL
	250	480	ST-z	GS	4785	ST-660/250-480 EL.Z-GS
670	200	410	ST-z	FL	3940	ST-670/200-410 EL.Z-FL
680	150	470	ST-z	FL	2690	ST-680/150-470 EL.Z-FL
705	180	485	ST-z	FL	3590	ST-705/180-485 EL.Z-FL
710	300	470	ST-z	FL	6525	ST-710/300-470 EL.Z-FL
760	250	500	ST-z	FL	5440	ST-760/250-500 EL.Z-FL
780	200	555	ST-z	FL	4485	ST-780/200-555 EL.Z-FL
854	320	600	ST-z	FL	8165	ST-854/320-600 EL.Z-FL
926	240	370	ST-z	FL	5970	ST-926/240-370 EL.Z-FL
968	240	670	ST-z	FL	6095	ST-968/240-670 EL.Z-FL

ZABELEŠKE | NOTES

TR

Otporne gume za viljuškare
Resilient solid tyres for fork lift trucks

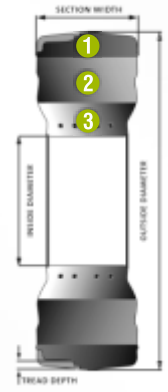

Višeslojna čvrsta elastična guma

1. Omotač: Otporan na habanje
2. Jezgro: Prigušenje udara
3. Centar: Sa metalnim kavezom

- Alternativa: **LOC**

SPECIJALNA JEDINJENJA:
NM Ne ostavlja trag
EC Elektroprovodan

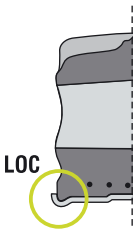

Multilayer solid resilient elastic tire

1. Tread: Wear resistant
2. Core: Shock absorbing
3. Center: With metal cage

- Alternative: **LOC**

SPECIAL COMPOUNDS
NM Non marking
EC Electric conductive

profil šare | tread profiles

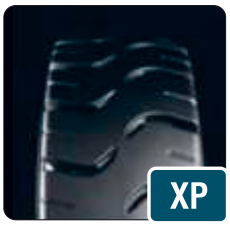

rodasa

TR

SERIJA
SERIES

Otporne gume za viljuškare | Resilient solid tyres for fork lift trucks

SIZE	RIM WIDTH		NM	LOC			kg	CODE
3.00-4	2.10	XP	•		250	84	260	TR-3.00-4/2.10 XP
	2.50	XP	•		250	84	260	TR-3.00-4/2.50 XP
4.00-4	2.50	XP	•		306	93	535	TR-4.00-4/2.50 XP
4.00-8	3.00	HT	•	•	398	94	950	TR-4.00-8/3.00 HT
	3.00	XP	•	•	406	104	950	TR-4.00-8/3.00 XP
	3.00	LG	•	•	406	104	950	TR-4.00-8/3.00 LG
5.00-8	3.00	HT	•	•	452	114	1415	TR-5.00-8/3.00 HT
	3.00	XP	•	•	457	122	1415	TR-5.00-8/3.00 XP
15x4$^{1/2}$-8	3.00	HT	•	•	373	110	1040	TR-15x41/2-8/3.00 HT
	3.00	XP	•	•	377	118	1040	TR-15x41/2-8/3.00 XP
	3.00	LG	•	•	377	118	1040	TR-15x41/2-8/3.00 LG
16x6-8	4.33	HT	•	•	409	143	1455	TR-16x6-8/4.33 HT
	4.33	XP	•	•	411	152	1455	TR-16x6-8/4.33 XP
18x7-8	4.33	HT	•	•	445	147	2145	TR-18x7-8/4.33 HT
	4.33	XP	•	•	456	158	2145	TR-18x7-8/4.33 XP
	4.33	L	•	•	456	158	2145	TR-18x7-8/4.33 L
6.00-9	4.00	HT	•	•	520	130	1885	TR-6.00-9/4.00 HT
	4.00	XP	•	•	524	141	1885	TR-6.00-9/4.00 XP
140/55-9	4.00	HT	•	•	380	132	1170	TR-140/55-9/4.00 HT
	4.00	XP	•	•	380	132	1170	TR-140/55-9/4.00 XP
21x8-9	6.00	HT	•	•	514	180	2755	TR-21x8-9/6.00 HT
	6.00	XP	•	•	516	186	2755	TR-21x8-9/6.00 XP
6.50-10	5.00	HT	•	•	568	153	2340	TR-6.50-10/5.00 HT
	5.00	XP	•	•	574	160	2340	TR-6.50-10/5.00 XP
23x9-10	6.50	HT	•	•	574	187	3445	TR-23x9-10/6.50 HT
	6.50	XP	•	•	583	200	3445	TR-23x9-10/6.50 XP
200/50-10	6.50	HT	•	•	450	175	2470	TR-200/50-10/6.50 HT
	6.50	XP	•	•	456	197	2470	TR-200/50-10/6.50 XP
7.00-12	5.00	HT	•	•	646	163	2920	TR-7.00-12/5.00 HT
	5.00	XP	•	•	650	171	2920	TR-7.00-12/5.00 XP
	5.00	L	•	•	650	171	2920	TR-7.00-12/5.00 L
23x10-12	8.00	HT	•	•	570	219	3770	TR-23x10-12/8.00 HT
	8.00	XP	•	•	583	240	3770	TR-23x10-12/8.00 XP
27x10-12	8.00	HT	•	•	670	235	3900	TR-27x10-12/8.00 HT
	8.00	XP	•	•	676	240	3900	TR-27x10-12/8.00 XP
23x5-13	3.75	XP	•	•	617	138	1495	TR-23x5-13/3.75 XP
5.50-15	4.50	XP	•		664	143	2195	TR-5.50-15/4.50 XP
6.00-15	4.50	XP	•		693	150	2455	TR-6.00-15/4.50 XP
7.00-15	5.50	HT	•	•	717	162	3545	TR-7.00-15/5.50 HT
	5.50	XP	•	•	730	180	3545	TR-7.00-15/5.50 XP

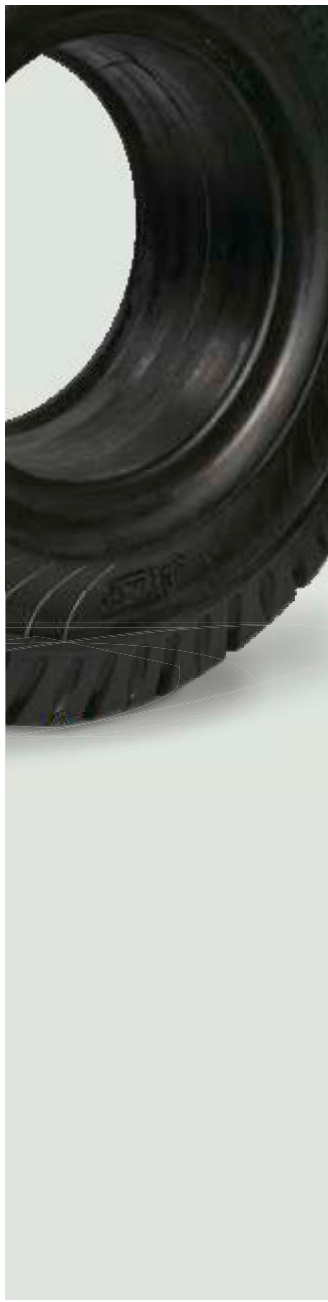

rodasa

SERIJA SERIES TR

SIZE	RIM WIDTH		NM	LOC			kg	CODE
7.50-15	6.00	HT	•	•	743	186	3900	TR-7.50-15/6.00 HT
	5.50	XP	•		744	194	3900	TR-7.50-15/5.50 XP
	6.00	XP	•		744	194	3900	TR-7.50-15/6.00 XP
	6.50	XP	•		744	194	3900	TR-7.50-15/6.50 XP
8.25-15	5.50	XP	•		806	208	4530	TR-8.25-15/5.50 XP
	6.50	HT	•	•	803	192	4750	TR-8.25-15/6.50 HT
	6.50	XP	•	•	806	208	4750	TR-8.25-15/6.50 XP
28x9-15	7.00	HT	•	•	680	200	3900	TR-28x9-15/7.00 HT
	7.00	XP	•	•	692	225	3900	TR-28x9-15/7.00 XP
28x12$^{1/2}$-15	9.75	XP	•	•	710	284	5525	TR-28x121/2-15/9.75 XP
250-15	7.00	HT	•	•	709	206	4640	TR-250-15/7.00 HT
	7.00	XP	•	•	709	225	4640	TR-250-15/7.00 XP
	7.50	XP	•	•	709	236	4640	TR-250-15/7.50 XP
300-15	8.00	HT	•	•	807	244	5850	TR-300-15/8.00 HT
	8.00	XP	•	•	812	255	5850	TR-300-15/8.00 XP
355/65-15	9.75	HT	•	•	809	260	7800	TR-355/65-15/9.75 HT
	9.75	XP	•	•	812	284	7800	TR-355/65-15/9.75 XP
7.50-16	6.00	XP	•		751	204	3950	TR-7.50-16/6.00 XP
9.00-20	6.50	XP	•		974	220	5400	TR-9.00-20/6.50 XP
	7.00	XP	•		974	220	5400	TR-9.00-20/7.00 XP
10.00-20	7.50	XP	•		1009	250	6000	TR-10.00-20/7.50 XP
	7.50	L	•		1009	250	6000	TR-10.00-20/7.50 L
	8.00	XP	•		1009	250	6000	TR-10.00-20/8.00 XP
11.00-20	8.00	XP	•		1040	260	6540	TR-11.00-20/8.00 XP
12.00-20	8.00	XP	•		1090	260	7560	TR-12.00-20/8.00 XP
	8.00	L	•		1090	260	7560	TR-12.00-20/8.00 L
	8.50	XP	•		1090	260	7560	TR-12.00-20/8.50 XP
	10.00	XP	•		1090	313	7800	TR-12.00-20/10.00 XP
355/50-20	10.00	L	•		828	307	8990	TR-355/50-20/10.00 L
12.00-24	8.50	XP	•		1178	295	8040	TR-12.00-24/8.50 XP
	10.00	XP	•		1178	295	8280	TR-12.00-24/10.00 XP
14.00-24	10.00	XP	•		1318	326	11000	TR-14.00-24/10.00 XP
16.00-25	11.25	XP	•		1442	410	15000	TR-16.00-25/11.25 XP

roda s a

ZABELEŠKE | NOTES

SERIJA
SERIES

BU

Ball units
Ball units

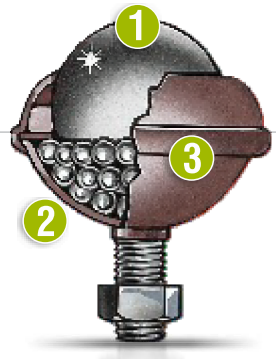

	1 Load Balls	2 Supporting balls	3 Kućište
SS	Ugljenični čelik 60-66 RC	Ugljenični čelik 60-66 RC	Željezni čelik pocinkovan
NS	Najlon 66	Ugljenični čelik 60-66 RC	Željezni čelik pocinkovan
XX	Nerđajući čelik AISI 420 52-58 RC	Nerđajući čelik AISI 420 52-58 RC	Nerđajući čelik AISI 304
XS	Nerđajući čelik AISI 420 52-58 RC	Nerđajući čelik AISI 420 52-58 RC	Željezni čelik pocinkovan

	1 Load Ball	2 Supporting Balls	3 Housing
SS	Carbon Steel 60-66 RC	Carbon Steel 60-66 RC	Ferrous Steel Zinc Plated
NS	Nylon 66	Carbon Steel 60-66 RC	Ferrous Steel Zinc Plated
XX	Stainless Steel AISI 420 52-58 RC	Stainless Steel AISI 420 52-58 RC	Stainless Steel AISI 304
XS	Stainless Steel AISI 420 52-58 RC	Stainless Steel AISI 420 52-58 RC	Ferrous Steel Zinc Plated

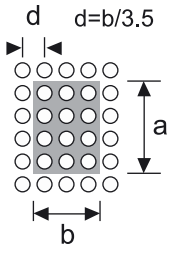

Visina se računa deljenjem uske dimenzije 3.5.
Ovo osigurava da su 3 kuglične jedinice u svakom trenutku ispod najuže dimenzije opterećenja.

The pitch is calculated by dividing the narrowest dimension by 3,5.
This ensures that 3 ball units are beneath the narrowest dimension of the load at any time.

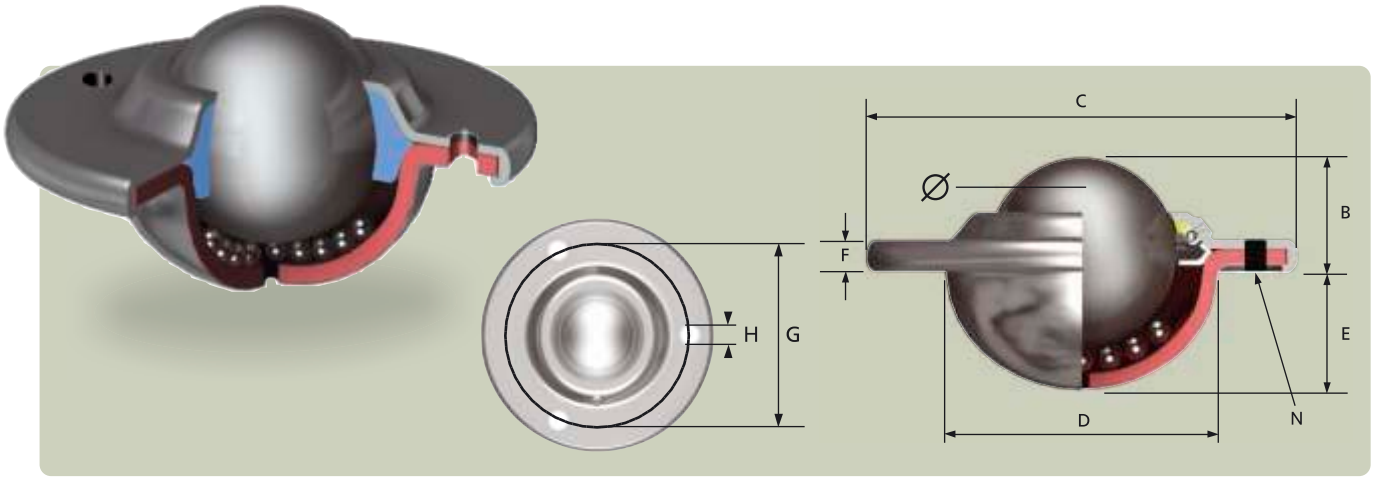

BU.H

Ø	B	C	D	E	F	N*	G	H	Materijal Material	kg		Kod Code
15	10,2	41,3	22,2	8,3	3,2	2	30,0	3,5	SS	12	6	BU.H-15/10/2-SS
19	10,0	61,0	29,1	12,0	3,2	2	44,5	5,1	SS	25	10	BU.H-19/10/2-SS
25	14,2	73,0	37,2	15,8	3,5	2	55,6	5,1	SS	55	25	BU.H-25/14/2-SS
32	16,2	73,7	45,5	19,9	4,2	2	58,7	5,1	SS	125	55	BU.H-32/16/2-SS
40	21,4	89,0	55,6	24,6	6,0	2	70,0	7,0	SS	140	60	BU.H-40/21/2-SS
50	28,3	120,7	75,3	30,2	6,3	3	92,0	8,0	SS	340	100	BU.H-50/28/3-SS

N* Broj rupa za montažu | Number of fitting holes

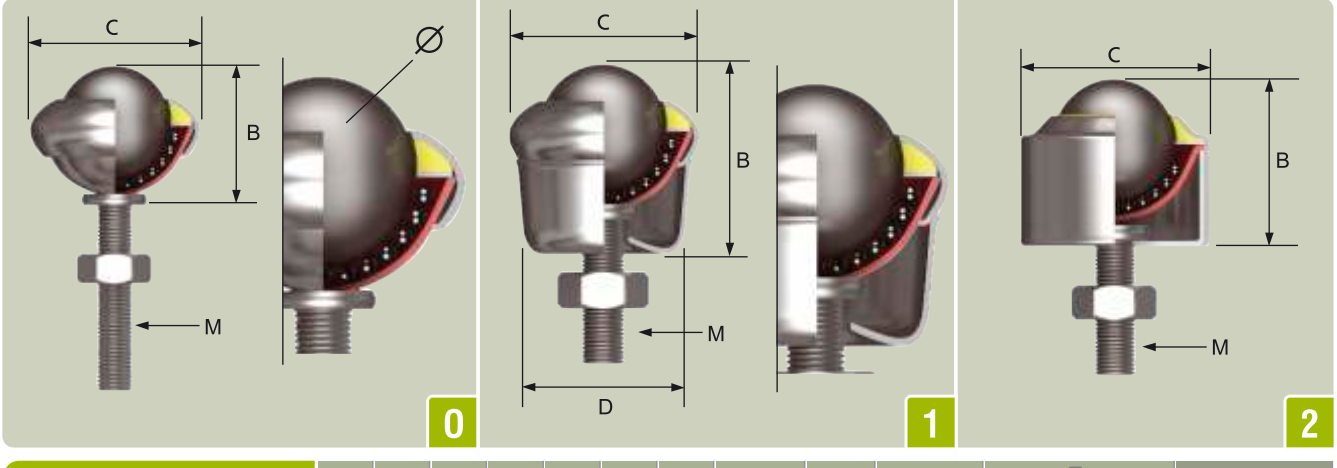

BU.B

Ø	B	C	D	E	F	N	M*	Tipe Type	Materijal Material	kg		Kod Code
19	24,6	32,1	-				M08x50	0	SS	25	10	BU.B-19/25/0-SS
	30,2	32,1	25,4				M08x45	1	SS	25	10	BU.B-19/30/1-SS
25,4	32,5	39,7	-				M08x50	0	SS	55	25	BU.B-25/32/0-SS
	39,7	39,7	25,4				M08x43	1	SS	55	25	BU.B-25/40/1-SS
	35,8	39,5	-				M08x28	2	SS	100	50	BU.B-25/36/2-SS
40	47,6	55,5	-				M10x50	0	SS	140	60	BU.B-40/48/0-SS
	54,8	55,5	49,0				M10x42	1	SS	140	60	BU.B-40/55/1-SS
50	76,0	89,0	-				M16x75	2	SS	340	100	BU.B-50/76/2-SS

M* Različite dužine dostupne na zahtev | Different legths available on request

Za svaku kombinaciju različitih materijala, zamenite deo SS koda kod relativnog (NS-XX ili -XS) kao što je opisano na strani 8.1

Maksimalna veličina za tip -NS: Napunimo ( ) = 25 Kg
Load dovn ( ) =10 Kg.

For each different material combination, subsitute the suffix SS of the code, by the relative (NS - XX or -XS) as described to the previous page No 8.1

Maximum capaity for type -NS: Load up ( )= 25 Kg
Load down ( )= 10 Kg.

rodasa

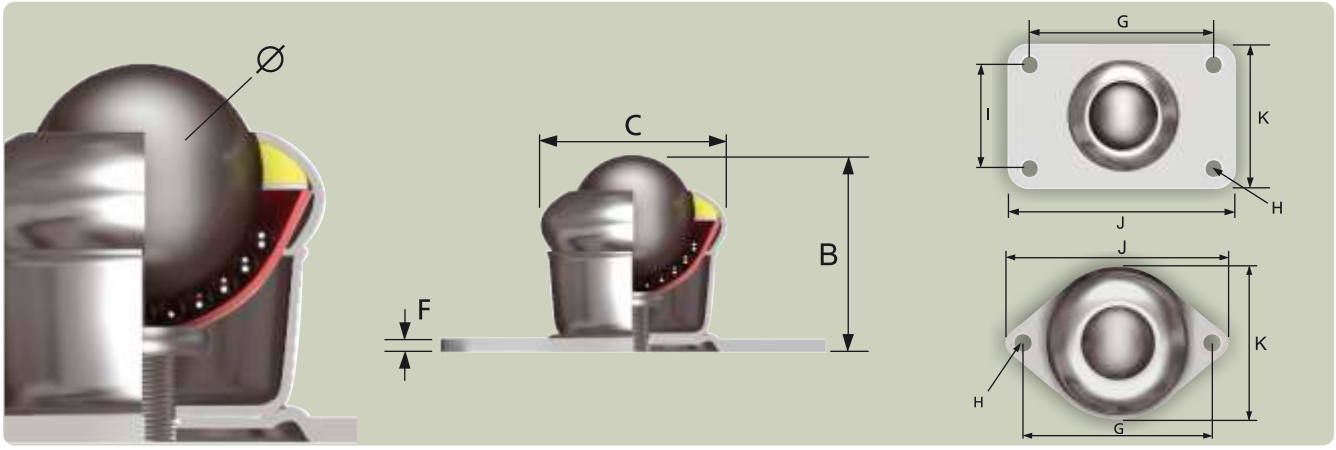

BU.T

Ø	B	C	JxK	F	N*	GxI	H	Materijal Material	kg		Kod Code
19	32,5	32,1	65x38	2,0	4	49,2x25,4	4,7	SS	25	10	BU.T-19/32/4-SS
25,4	41,3	39,7	65x38	2,0	4	49,2x25,4	6,3	SS	55	25	BU.T-25/40/4-SS
	30,5	44,5	69x51	1,0	2	60,3	5,0	SS	55	25	BU.T-25/44/2-SS
	35,8	42,0	69x51	1,8	2	58,7	5,0	SS	100	50	BU.T-25/42/2-SS
32	44,4	73,0	58,7x58,7	2,0	4	47,6x47,6	4,8	SS	125	55	BU.T-32/73/4-SS
40	57,0	55,5	58,7x58,7	2,0	4	47,6x47,6	4,8	SS	140	60	BU.T-40/55/4-SS
50	76,0	89,0	127x127	6,3	4	89x89	13,5	SS	340	100	BU.T-50/89/4-SS

N* Broj rupa za montažu | Number of fitting holes

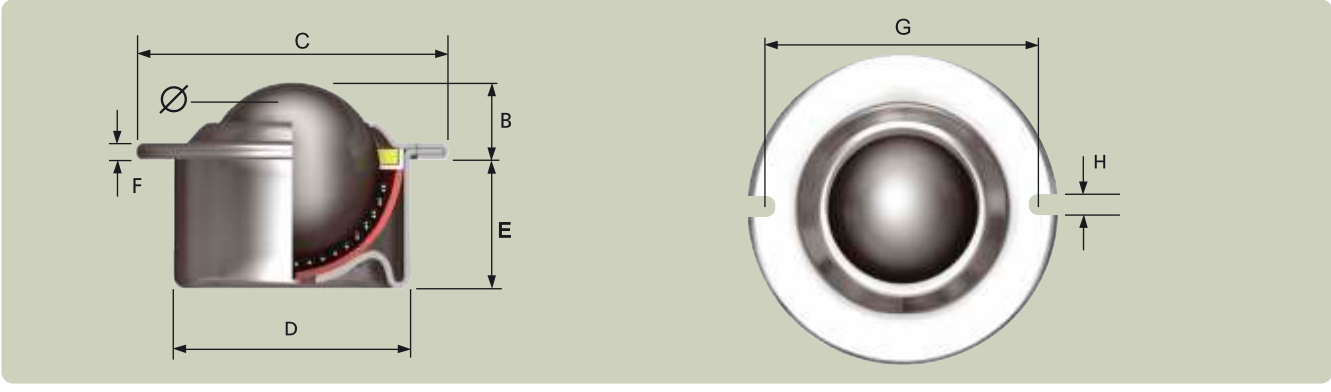

BU.E

Ø	B	C	D	E	F	N*	G	H	Materijal Material	kg		Kod Code
15	9,5	31,0	24 +/-0,065	11,5	2,8	0	-	-	SS	60	30	BU.E-15/10/0-SS
	9,5	31,0	24 +/-0,065	11,5	2,8	2	29,0	3,5	SS	60	30	BU.E-15/10/2-SS
22	9,8	45,0	36 +/-0,08	20,2	2,8	0	-	-	SS	160	80	BU.E-22/10/0-SS
	9,8	45,0	36 +/-0,08	20,2	2,8	2	42,0	3,5	SS	160	80	BU.E-22/10/2-SS
30	13,8	55,0	45 +/-0,08	23,2	4,0	0	-	-	SS	300	150	BU.E-30/14/0-SS
	13,8	55,0	49 +/-0,08	23,2	4,0	2	51,0	3,5	SS	300	150	BU.E-30/14/2-SS
45	19,0	75,0	62 +/-0,095	34,5	4,0	0	-	-	SS	610	305	BU.E-45/19/0-SS
	19,0	75,0	65 +/-0,095	34,5	4,0	2	69,0	4,3	SS	610	305	BU.E-45/19/2-SS

N* Broj rupa za montažu | Number of fitting holes

Za svaku kombinaciju različitih materijala, zamenite deo SS koda kod relativnog (NS-XX ili -XS) kao što je opisano na strani 8.1

Maksimalna veličina za tip -NS: Napunimo ( ) = 25 Kg
Load dovn ( ) =10 Kg.

For each different material combination, subsitute the suffix SS of the code, by the relative (NS - XX or -XS) as described to the previous page No 8.1

Maximum capaity for type -NS: Load up ( )= 25 Kg
Load down ( )= 10 Kg.

roda s a

ZABELEŠKE | NOTES

Groove vheels
Groove wheels

- Čelik 9SMn28 pocinkovan
- Ležaj osovine:
  C Jedan kuglični ležaj
  S Dvostruki kuglični ležaj
- Profil
  V Ugao
  U Round
  L Kvadrat

- Steel 9SMn28 zinc plated
- Axle bearing
  C Single ball bearing
  S Double ball bearing
- Profile
  V Angle
  U Round
  L Square

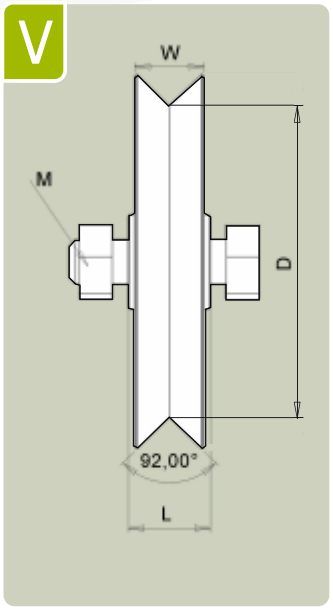

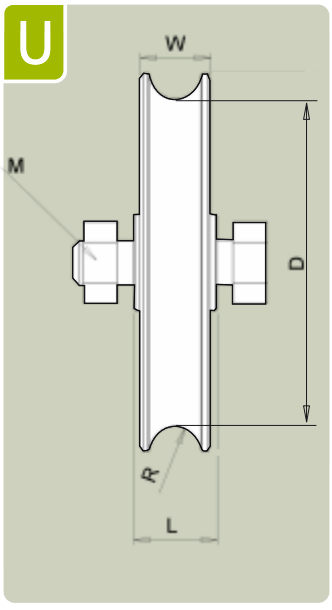

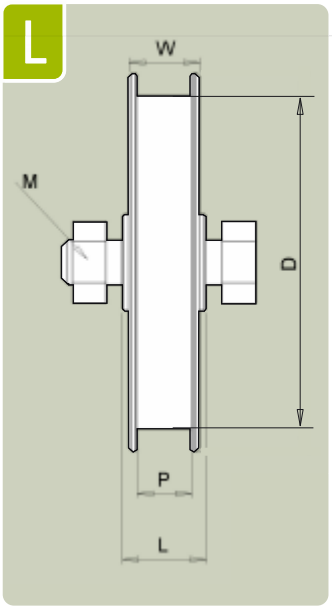

	W	D	L	Profil Profile		P	R	M	kg	Kod Code
58	17	43,5	22	V		-	-	M10x40	130	GW-058-S.C-V
	17	44,0	22	U		-	13	M10x40	130	GW-058-S.C-U
	17	48,0	22	L		11	-	M10x40	130	GW-058-S.C-L
	27	35,8	32	V		-	-	M10x50	200	GW-058-S.S-V
	27	37,0	32	U		-	21	M10x50	200	GW-058-S.S-U
	27	42,0	32	L		17	-	M10x50	200	GW-058-S.S-L
68	17	53,5	22	V		-	-	M10x40	150	GW-068-S.C-V
	17	54,0	22	U		-	13	M10x40	150	GW-068-S.C-U
	17	58,0	22	L		11	-	M10x40	150	GW-068-S.C-L
	27	45,8	32	V		-	-	M10x50	250	GW-068-S.S-V
	27	47,0	32	U		-	21	M10x50	250	GW-068-S.S-U
	27	54,0	32	L		17	-	M10x50	250	GW-068-S.S-L
78	20	60,6	24	V		-	-	M12x45	180	GW-078-S.C-V
	20	62,0	24	U		-	16	M12x45	180	GW-078-S.C-U
	20	66,0	24	L		13	-	M12x45	180	GW-078-S.C-L
	30	52,9	35	V		-	-	M12x50	280	GW-078-S.S-V
	30	57,0	35	U		-	21	M12x50	280	GW-078-S.S-U
	30	62,0	35	L		21	-	M12x50	280	GW-078-S.S-L
98	20	80,6	24	V		-	-	M12x45	210	GW-098-S.C-V
	20	82,0	24	U		-	16	M12x45	210	GW-098-S.C-U
	20	86,0	24	L		13	-	M12x45	210	GW-098-S.C-L
	30	72,9	35	V		-	-	M12x50	300	GW-098-S.S-V
	30	77,0	35	U		-	21	M12x50	300	GW-098-S.S-U
	30	82,0	35	L		21	-	M12x50	300	GW-098-S.S-L
118	22	98,7	28	V		-	-	M14x50	250	GW-118-S.C-V
	22	102,0	28	U		-	16	M14x50	250	GW-118-S.C-U
	22	104,0	28	L		15	-	M14x50	250	GW-118-S.C-L
	35	91,9	41	V		-	-	M14x70	350	GW-118-S.S-V
	35	97,0	41	U		-	21	M14x70	350	GW-118-S.S-U
	35	94,0	41	L		21	-	M14x70	350	GW-118-S.S-L
138	22	118,7	28	V		-	-	M14x50	280	GW-138-S.C-V
	22	122,0	28	U		-	16	M14x50	280	GW-138-S.C-U
	22	124,0	28	L		15	-	M14x50	280	GW-138-S.C-L
	35	111,9	41	V		-	-	M14x70	400	GW-138-S.S-V
	35	117,0	41	U		-	21	M14x70	400	GW-138-S.S-U
	35	114,0	41	L		21	-	M14x70	400	GW-138-S.S-L
158	35	131,9	41	V		-	-	M14x70	450	GW-158-S.S-V
	35	137,0	41	U		-	21	M14x70	450	GW-158-S.S-U
	35	134,0	41	L		21	-	M14x70	450	GW-158-S.S-L
197	35	170,9	41	V		-	-	M18x70	500	GW-197-S.S-V
	35	176,0	41	U		-	21	M18x70	500	GW-197-S.S-U
	35	173,0	41	L		21	-	M18x70	500	GW-197-S.S-L

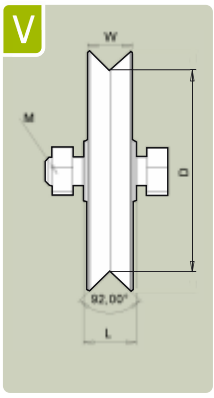

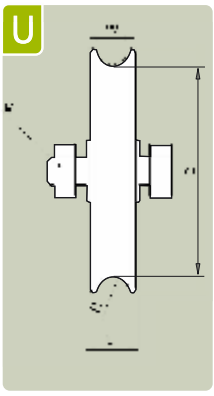

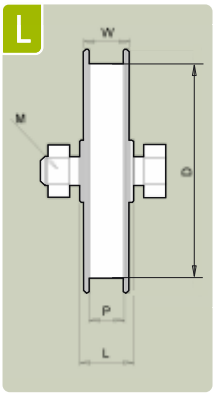

rodasa

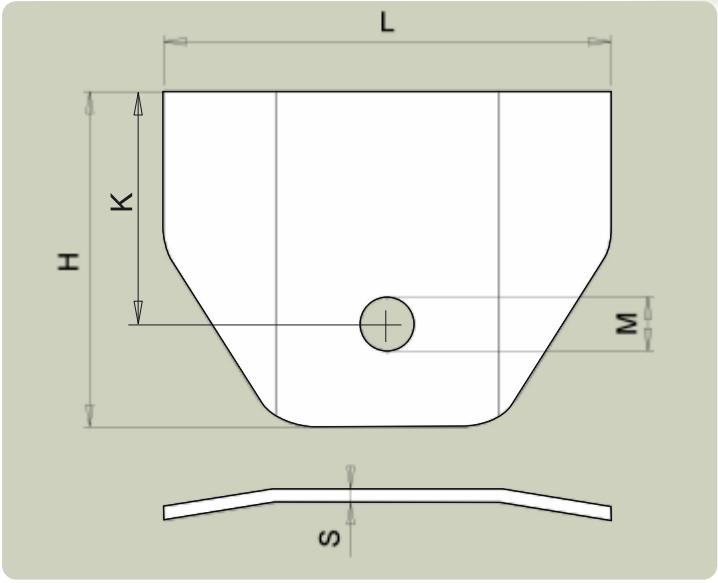

	L	H	S	K	M	Kod Code
058	60	53	3,0	33,0	10,2	GW-058-SF
068	70	58	3,0	38,0	10,2	GW-068-SF
078	80	63	3,0	43,0	12,2	GW-078-SF
098	100	74	3,0	53,0	12,2	GW-098-SF
118	120	80	5,0	63,0	14,2	GW-118-SF
138	140	95	5,0	73,0	14,2	GW-138-SF
158	160	112	5,0	84,0	14,2	GW-158-SF
198	200	145	6,0	103,5	18,2	GW-198-SF

GWoF SERIJA SERIES

Fiksiran utor | Groove castor fixed

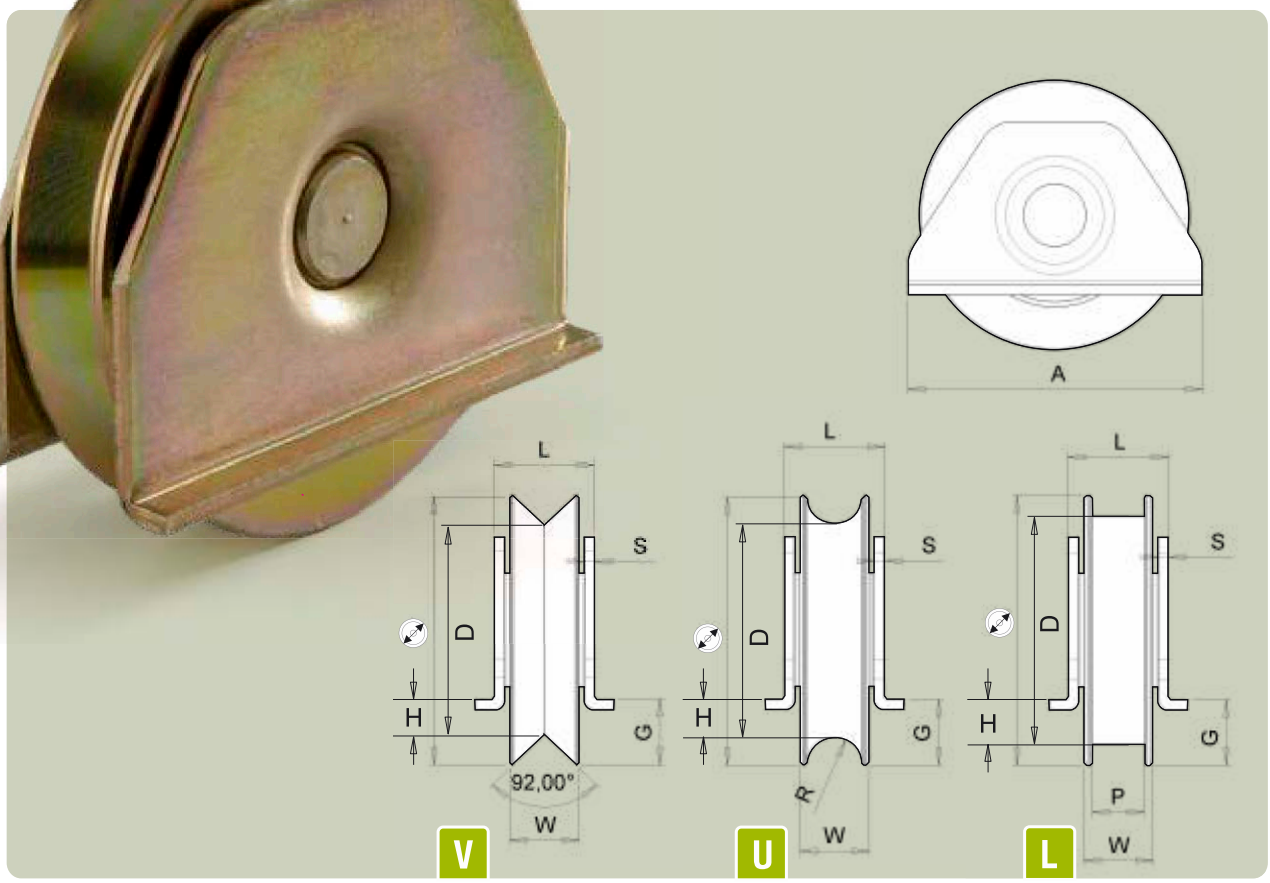

	W	D	A	L	H	Profil Profile		P	R	kg	Kod Code
58	17	43,5	60	26	7,3	V		-	-	130	GW-058-S.C-V-0F
	17	44,0	60	26	7,5	U		-	13	130	GW-058-S.C-U-0F
	17	48,0	60	26	9,5	L		11	-	130	GW-058-S.C-L-0F
68	17	53,5	70	26	9,8	V		-	-	150	GW-068-S.C-V-0F
	17	54,0	70	26	10,0	U		-	13	150	GW-068-S.C-U-0F
	17	58,0	70	26	12,0	L		11	-	150	GW-068-S.C-L-0F
78	20	60,6	85	29	11,3	V		-	-	180	GW-078-S.C-V-0F
	20	62,0	85	29	12,0	U		-	16	180	GW-078-S.C-U-0F
	20	66,0	85	29	14,0	L		13	-	180	GW-078-S.C-L-0F
98	20	80,6	100	29	12,3	V		-	-	210	GW-098-S.C-V-0F
	20	82,0	100	29	13,0	U		-	16	210	GW-098-S.C-U-0F
	20	86,0	100	29	15,0	L		13	-	210	GW-098-S.C-L-0F
118	22	98,7	123	34	19,4	V		-	-	250	GW-118-S.C-V-0F
	22	102,0	123	34	21,0	U		-	16	250	GW-118-S.C-U-0F
	22	104,0	123	34	22,0	L		15	-	250	GW-118-S.C-L-0F
138	22	118,7	144	35	19,4	V		-	-	280	GW-138-S.C-V-0F
	22	122,0	144	35	21,0	U		-	16	280	GW-138-S.C-U-0F
	22	124,0	144	35	22,0	L		15	-	280	GW-138-S.C-L-0F

rodasa

GW TF

Fiksiran utor | Groove castor fixed

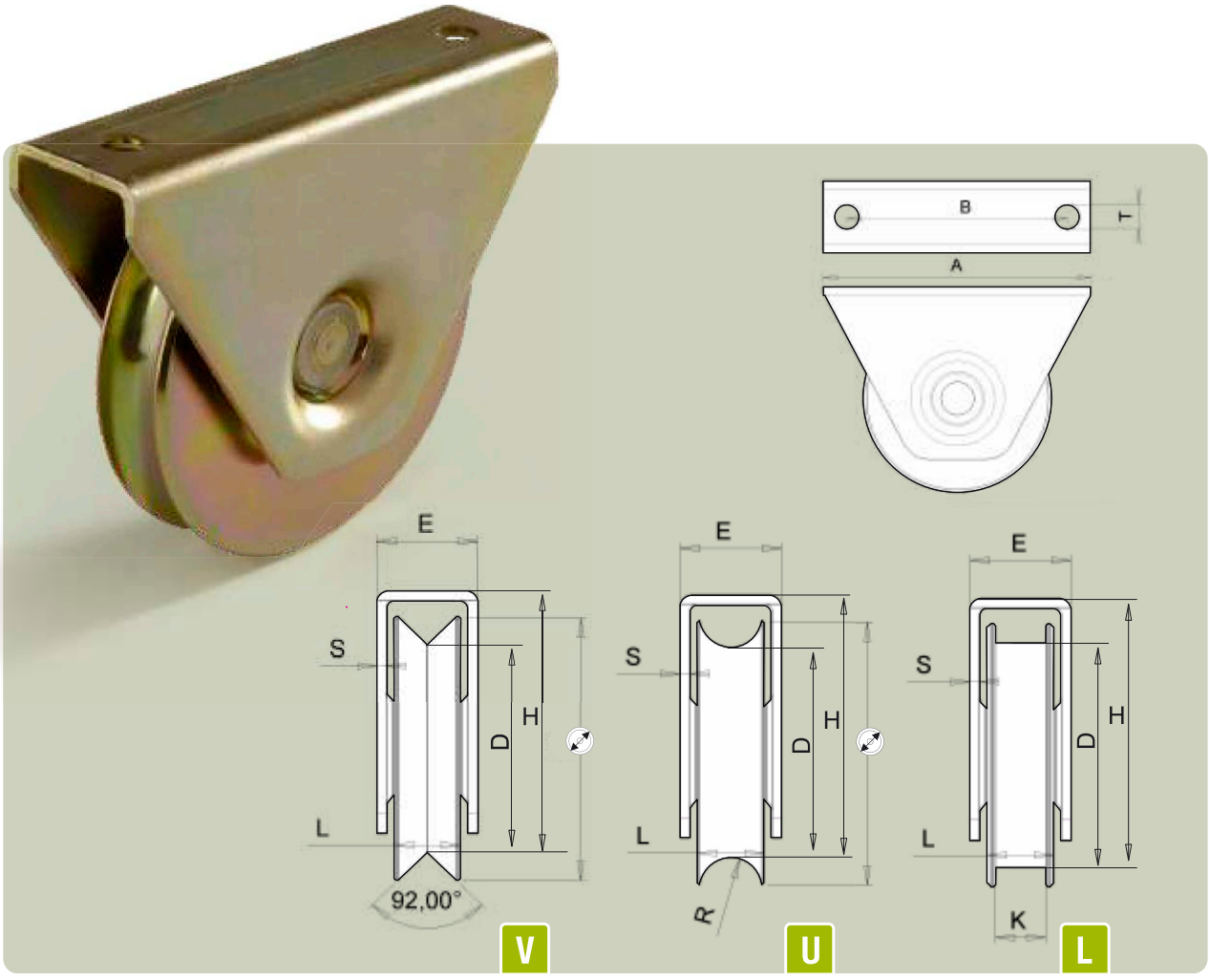

	L	D	H	A	E	B	T	Profil Profile		K	R	kg	Kod Code
58	17	43,5	62,8	95	28	70	9	V		-	-	130	GW-058-S.C-V-TF
	17	44,0	63,0	95	28	70	9	U		-	13	130	GW-058-S.C-U-TF
	17	48,0	65,0	95	28	70	9	L		11	-	130	GW-058-S.C-L-TF
68	17	53,5	71,8	95	28	70	9	V		-	-	150	GW-068-S.C-V-TF
	17	54,0	72,0	95	28	70	9	U		-	13	150	GW-068-S.C-U-TF
	17	58,0	74,0	95	28	70	9	L		11	-	150	GW-068-S.C-L-TF
78	20	60,6	80,3	115	36	90	9	V		-	-	180	GW-078-S.C-V-TF
	20	62,0	81,0	115	36	90	9	U		-	16	180	GW-078-S.C-U-TF
	20	66,0	83,0	115	36	90	9	L		13	-	180	GW-078-S.C-L-TF
98	20	80,6	95,3	128	36	100	9	V		-	-	210	GW-098-S.C-V-TF
	20	82,0	96,0	128	36	100	9	U		-	16	210	GW-098-S.C-U-TF
	20	86,0	98,0	128	36	100	9	L		13	-	210	GW-098-S.C-L-TF

ZABELEŠKE | NOTES

RUČNI PALETARI
HAND PALLET TRUCKS

HP-TM

- Nosivost **2500 kg**
- Volani 200k50-mm
  XO Poliuretan sa centrom od livenog gvožđa
  AE Soft elastičan sa aluminijumskim centrom
  N Najlon
- Nosivi valjci: 80k70 mm
  XO dvostruki, poliuretan na čeličnom centru
  N Najlon
- Ventil za preopterećenje
- Regulacioni ventil za smanjenje brzine
- Paletni ulazno-izlazni točkovi

- Load capacity **2500 Kg**
- Steering wheels: 200x50-mm
  XO Polyurethane with cast iron center
  AE Soft Elastic with aluminum center
  N Nylon
- Load rollers: 80x70-mm
  XO Double, PU on steel center
  N Nylon
- Overload valve
- Lowering speed control valve
- Pallet entry-exit wheels

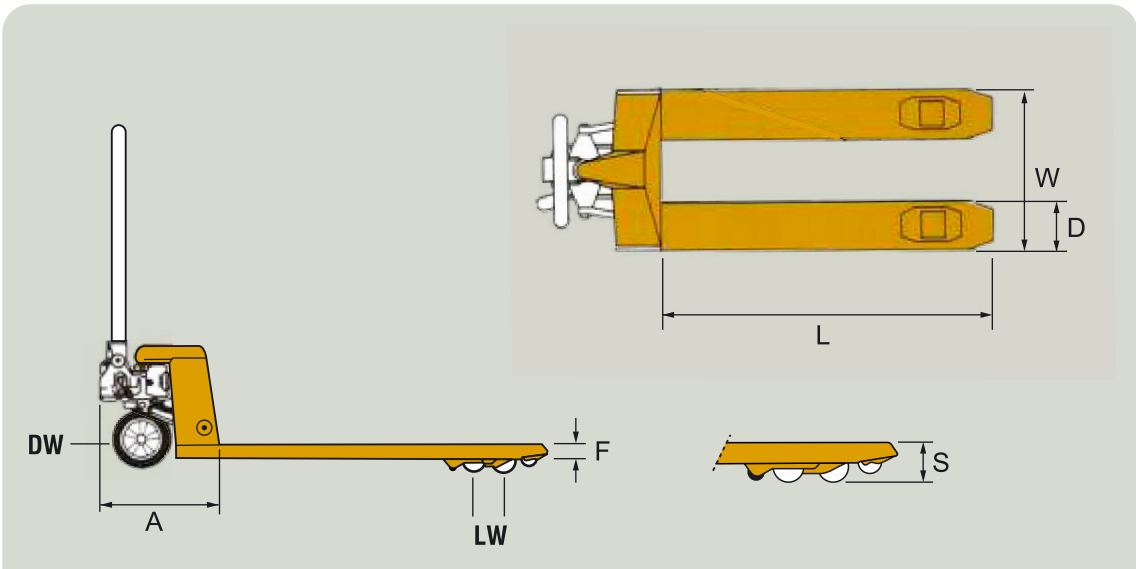

L	W	A	DxF	S min	S max	DW	LW	CODE
800/900/**1150**	450/**540**/685	400	160x50	85	200	XO	XO	HP-TM-**540*x1150***.XO.2XO
800/900/**1150**	450/**540**/685	400	160x50	85	200	AE	XO	HP-TM-**540*x1150***.AE.2XO
800/900/**1150**	450/**540**/685	400	160x50	85	200	N	N	HP-TM-**540*x1150***.N.2N

* Odabrane dimenzije (W x L)
* Choosen dimensions (W x L)

rodasa

HP-H51

RUČNI PALETARI
HAND PALLET TRUCKS

Niskoprofilni ručni paletar | **Low Profile** Hand Pallet Truck

- Nosivost **1500 kg**
- Volani 180k50-mm
  XO Poliuretan sa centrom od livenog gvožđa
- Utovarni valjci: 80k70 mm
  XO dvostruki, poliuretan na čeličnom centru
- Ventil za preopterećenje
- Regulacioni ventil za smanjenje brzine
- Paletni ulazno-izlazni točkovi

- Load capacity **1500 Kg**
- Steering wheels: 180x50-mm
  XO Polyurethane with cast iron center
- Load rollers: 80x70-mm
  XO Double, PU on steel center
- Overload valve
- Lowering speed control valve
- Pallet entry-exit wheels

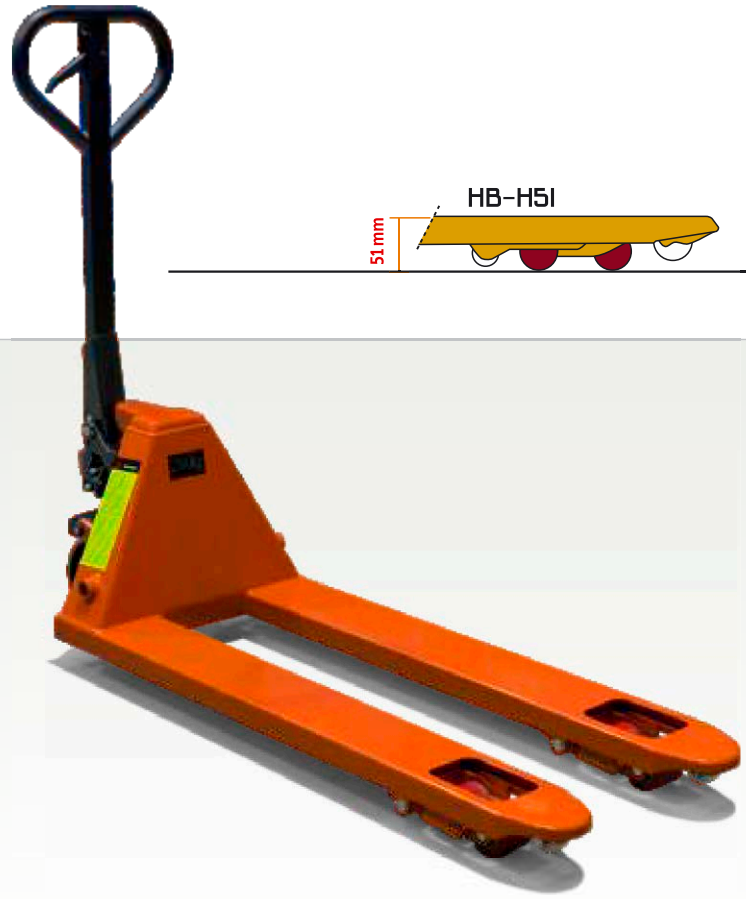

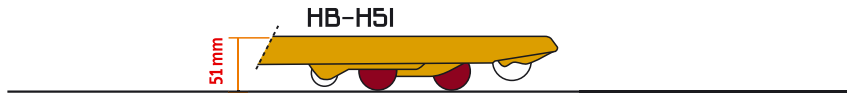

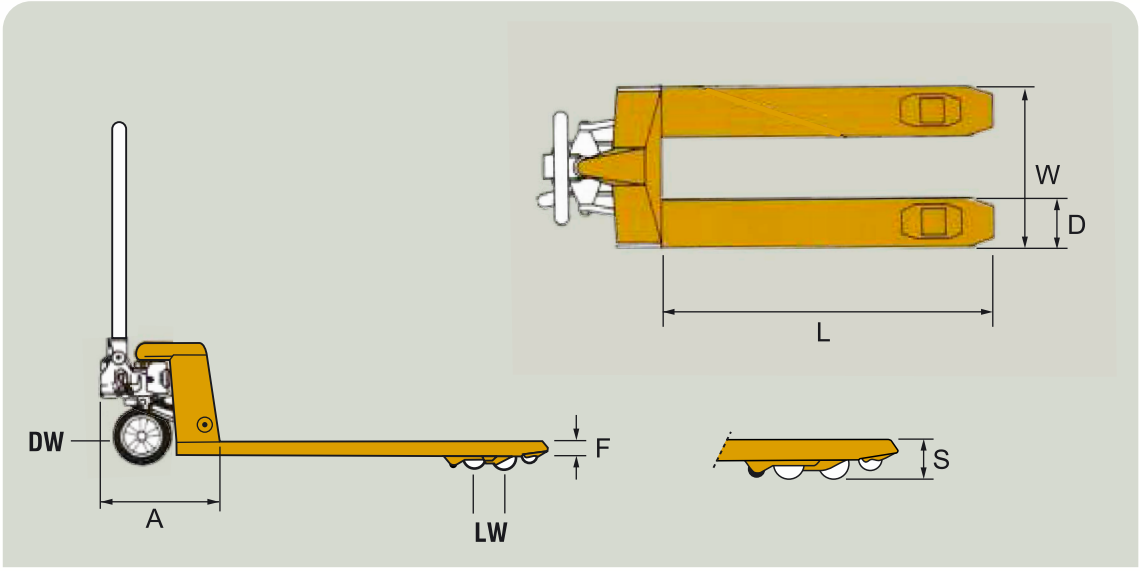

L	W	A	DxF	S min	S max	DW	LW	CODE
1150	540	400	160x37	51	165	XO	XO	HP-H51-540x1150.XO.2XO

roda s a

RUČNI PALETARI
HAND PALLET TRUCKS

HP-INX

Inoks ručni paletar | **Inox** Hand Pallet Truck

Svi delovi su od nerđajućeg čelika
All parts made from Stainless Steel

- Nosivost **2000 kg**
- Volani 200k50-mm
  N Najlon
- Nosivi valjci: 80k70 mm
  N dvostruki najlon
- Ventil za preopterećenje
- Regulacioni ventil za smanjenje brzine
- Paletni ulazno-izlazni točkovi

- Load capacity **2000Kg**
- Steering wheels: 200x50-mm
  N Nylon
- Load rollers: 80x70-mm
  N Double Nylon
- Overload valve
- Lowering speed control valve
- Pallet entry-exit wheels

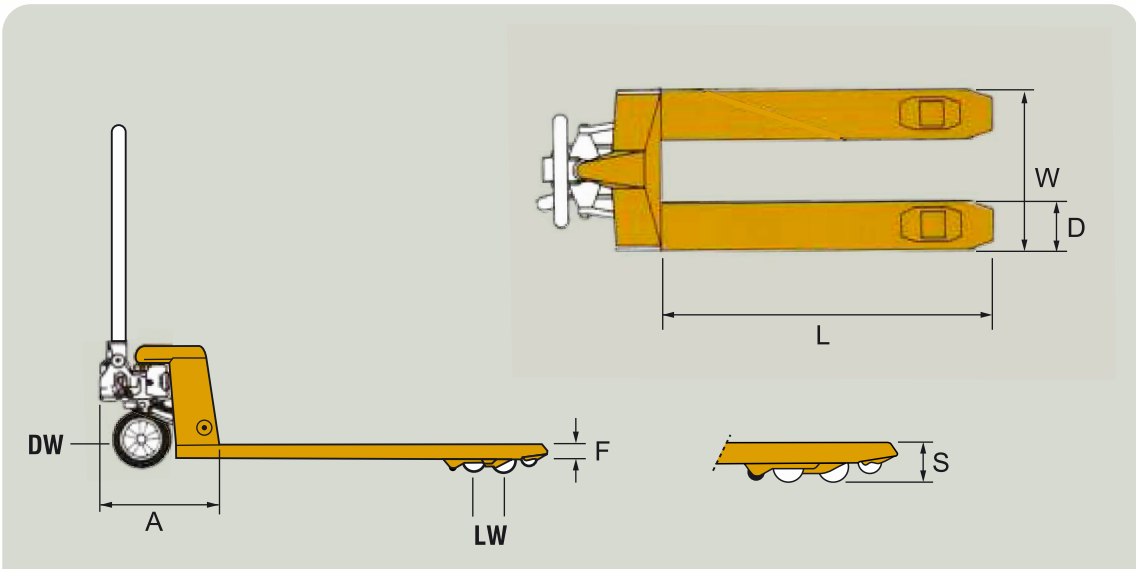

L	W	A	DxF	S min	S max	DW	LW	CODE
1150	540	400	160x60	85	200	N	N	HP-INX-540x1150.N.2N

HP-TMX

RUČNI PALETARI
HAND PALLET TRUCK

Scizor lift ručni paletar | Scizor Lift Hand Pallet Truck

- Nosivost **1000 kg**
- Volani 180k50-mm
  XO Poliuretan sa centrom od livenog gvožđa
- Nosivi valjci: 75k50-mm
  XO dvostruki, poliuretan na čeličnom centru
- Ventil za preopterećenje
- Regulacioni ventil za smanjenje brzine

Kod visine preko 400 mm, kamion se automatski stabilizuje

- Load capacity **1000 Kg**
- Steering wheels: 180x50-mm
  XO Polyurethane with cast iron center
- Load rollers: 75x50-mm
  XO Double, PU on steel center
- Overload valve
- Lowering speed control valve

In height over 400-mm, the truck is automaticaly being stabilized

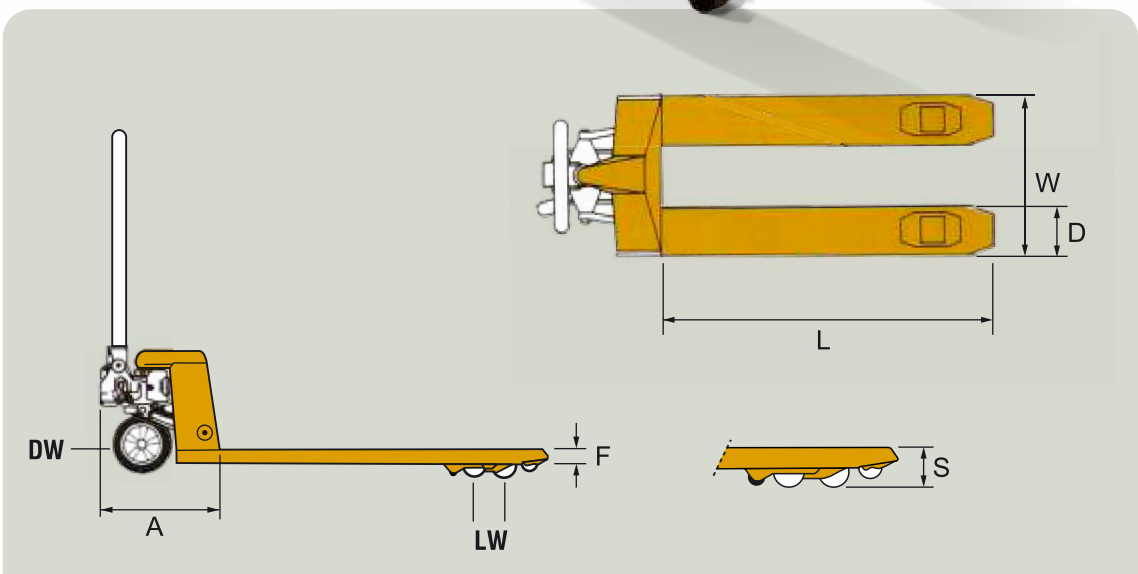

L	W	A	DxF	S min	S max	DW	LW	CODE
1150	540	400	162x50	85	800	XO	XO	HP-TMX-540x1150.XO.1XO

rodasa

RUČNI PALETARI
HAND PALLET TRUCK

HP-TMW

Težina ručnog paletara | Weighing hand pallet truck

Funkcije ponderisanja

- 0 setting
- Tare
- Neto / bruto težina
- Total
- Printer: Opcionalno

Tačnost ponderisanja: 1 kg
Tolerancija: +/- 0,1%

Weighing functions

- 0 Settting
- Tare
- Net / Gross weight
- Total
- Printer: optional

Weighing accuracy: 1Kg
Tolerance; +/-0,1%

- Nosivost **2000 kg**
- Volani 200k50-mm
  XO Poliuretan sa centrom od livenog gvožđa
- Nosivi valjci: 80k70 mm
  XO dvostruki, poliuretan na čeličnom centru
- Ventil za preopterećenje
- Regulacioni ventil za smanjenje brzine
- Paletni ulazno-izlazni točkovi

- Load capacity **2000Kg**
- Steering wheels: 200x50-mm
  XO Polyurethane with cast iron center
- Load rollers: 80x70-mm
  XO Double, PU on steel center
- Overload valve
- Lowering speed control valve
- Pallet entry-exit wheels

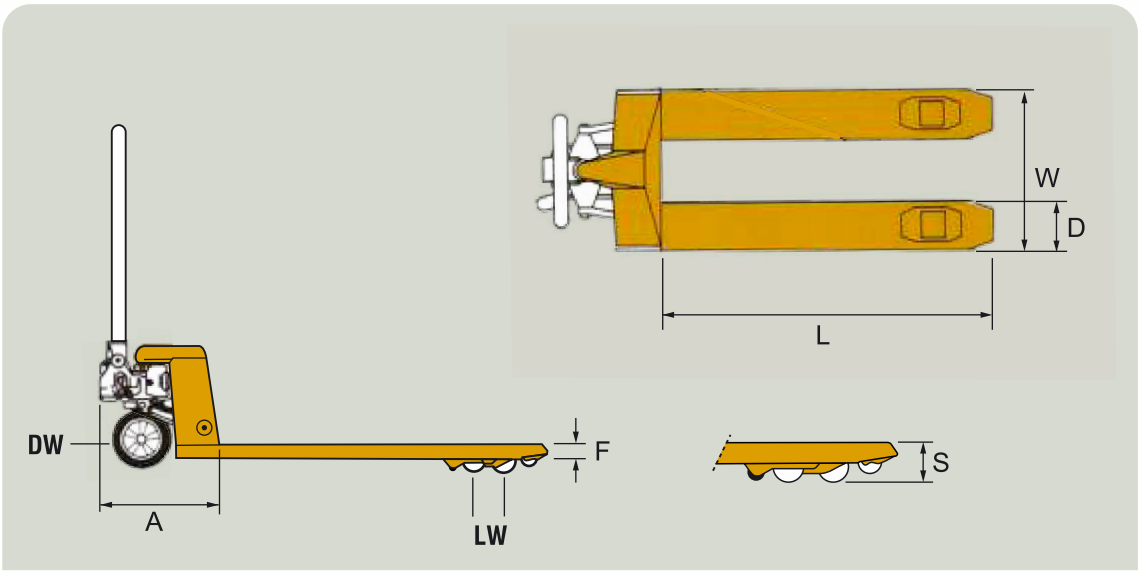

L	W	A	DxF	S min	S max	DW	LW	CODE
1150	570	400	180x60	90	200	XO	XO	HP-TMW-540x1150.XO.2XO

roda s a

ZABELEŠKE | NOTES

HT

Ručni viljuškar
Hand trucks

- Čelična cevna konstrukcija
- Ofarban epoxidnom bojom

- Steel tubular construction
- Epoxy painting

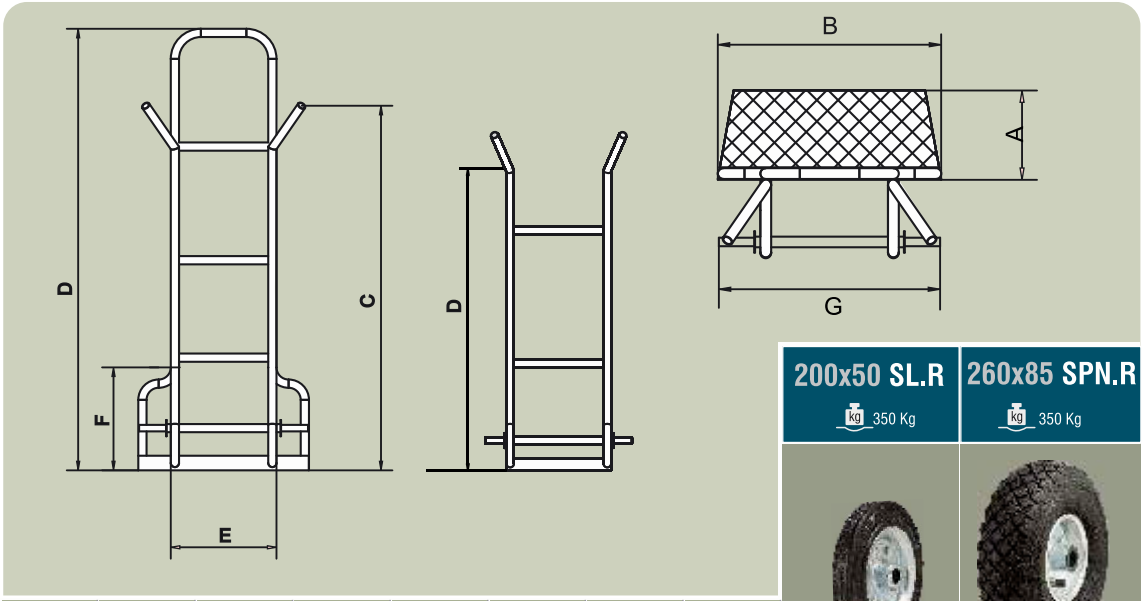

200x50 SL.R	260x85 SPN.R
350 Kg	350 Kg

MODEL	A	B	C	D	E	F	G		
1S	210	330	1200	1080	330	-	490	HT-1S/200-SL.R	HT-1S/268-SPN.R
2S	210	500	1200	1080	330	280	490	HT-2S/200-SL.R	HT-2S/268-SPN.R
3S	290	330	1180	1300	330	-	490	HT-3S/200-SL.R	HT-3S/268-SPN.R
4S	290	500	1180	1300	330	340	490	HT-4S/200-SL.R	HT-4S/268-SPN.R
AS	210	330	1180	1300	330	-	490	HT-AS/200-SL.R	HT-AS/268-SPN.R

rodasa

ZABELEŠKE | NOTES